GTH Series

Repeat -ability ±0.005 mm

Standard Environment
Integrated Linear Bearing Ball Screw Actuator

CONTENTS

Standard/Ball Screw

SMALL **GTH3** — Width 30mm, Max. stroke 300mm .....087, Recommended payload 13kg

SMALL **GTH4** — Width 44mm, Max. stroke 1000mm .....087, Recommended payload 25kg

SMALL **GTH5** — Width 54mm, Max. stroke 1050mm .....095, Recommended payload 30kg

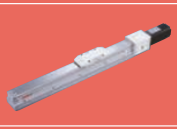

MEDIUM **GTH8** — Width 82mm, Max. stroke 1250mm .....099, Recommended payload 50kg

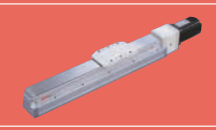

LARGE **GTH12** — Width 120mm, Max. stroke 1250mm .....107, Recommended payload 110kg

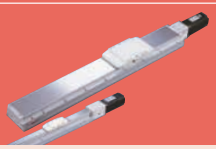

Dual Carriage Synchronous Movement In Reverse Direction

MEDIUM **GTH5S** — Width 54mm, Max. stroke 450mm .....111, Recommended payload 30kg

MEDIUM **GTH8S** — Width 82mm, Max. stroke 525mm .....115, Recommended payload 50kg

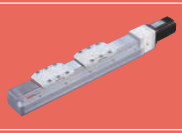

Dual Carriage

SMALL **GTH4D** — Width 44mm, Max. stroke 900mm .....087, Recommended payload 25kg

SMALL **GTH5D** — Width 54mm, Max. stroke 910mm .....095, Recommended payload 30kg

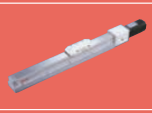

MEDIUM **GTH8D** — Width 82mm, Max. stroke 1100mm .....099, Recommended payload 50kg

LARGE **GTH12D** — Width 120mm, Max. stroke 1040mm .....107, Recommended. payload 110kg

Steel body

SMALL **GTH3K** — Width 30mm, Max. stroke 300mm .....087, Recommended payload 13kg

SMALL **GTH4K** — Width 44mm, Max. stroke 800mm .....087, Recommended payload 25kg

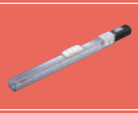

SMALL **GTH5K** — Width 54mm, Max. stroke 1050mm .....095, Recommended payload 30kg

MEDIUM **GTH8K** — Width 82mm, Max. stroke 1250mm .....099, Recommended payload 50kg

MSITEC PRODUCTIVITY THROUGH TECHNOLOGY
Visit msitec.com
Call 866-397-7388
Email info@msitec.com

Spec Index of Electric Actuator

GTH Built - in Linear Motion Guide Ball Screw Actuator - Slider Type

Env.	Drive Type	Model No.	Motor Output (w)	Width (mm)	Repeatability (mm)	Ball Screw Spec		Maximum Payload(kg)		Max. Speed*1 (mm/s)
						Outer Dia.(mm)	Lead(mm)	Horizontal	Vertical	
Standard Environment	Ball screw	GTH3	30W	30	±0.005	6	2	13	5	100
							8	10	2	480
		GTH4	50W	44	±0.005	10	2	25	8	100
							6	20	5	360
							12	12	2	720
			100W				2	25	8	100
							6	20	8	360
							12	12	3.5	720
		GTH5	100W	54	±0.005	12	2	30	10	100
							5	30	10	300
							10	15	5	600
							20	10	2.5	1200
		GTH8	200W	82	±0.005	16	5	50	15	300
							10	30	8	600
			400W				20	18	3	1200
		GTH12	400W	120	±0.005	16	5	110	33	300
							10	88	22	600
							20	40	10	1200
							32	30	8	1920

*1:The highest speed is based on the maximum servo motor's rpm (3000 or 3600).
*2:Max RPM is based on limitations of the ballnut or suggested servo motor limits.
*3:Max speed is based on max RPM of the ballscrew before whipping occurs. This could permanently damage the ballscrew.

Dual Carriage Synchronous Movement In Reverse Direction

Env.	Drive Type	Model No.	Motor Output (w)	Width (mm)	Repeatability (mm)	Ball Screw Spec		Maximum Payload(kg)		Max. Speed*1 (mm/s)
						Outer Dia.(mm)	Lead(mm)	Horizontal	Vertical	
Standard Environment	Ball screw	GTH5S	100W	54	±0.005	12	2	30	10	100
		GTH8S	200W	82	±0.005	16	5	50	15	300
			400W							

*1:The highest speed is based on the maximum servo motor's rpm (3000 or 3600).
*2:Max RPM is based on limitations of the ballnut or suggested servo motor limits.
*3:Max speed is based on max RPM of the ballscrew before whipping occurs. This could permanently damage the ballscrew.

MSITEC PRODUCTIVITY THROUGH TECHNOLOGY
Visit msitec.com
Call 866-397-7388
Email info@msitec.com

免費服務專線：大陸 China 400-875-0009 台灣 Taiwan 0800-800-893

MSITEC PRODUCTIVITY THROUGH TECHNOLOGY
Visit msitec.com
Call 866-397-7388
Email info@msitec.com

Stroke(mm) & Maximum Sp

Speed

Stroke	50	100	150	200	250	300	350	400	450	500	550	600	650	700	750	800	850	900	950	1000	1050	1100	1150	1200	1250	1300	1350	Page
100																												
480																												
100												90	80	70	60	50	43	40	37	33								087
360										330	320	270	240	210	180	150	130	120	110	100								
720										660	640	540	480	420	360	300	260	240	220	200								
100												90	80	70	60	50	43	40	37	33								
360										330	320	270	240	210	180	150	130	120	110	100								
720										660	640	540	480	420	360	300	260	240	220	200								
100													90	80	70	60	50	47	40	37	33							095
300											292	250	225	200	175	150	125	117	100	92	83							
600											583	500	450	400	350	300	250	233	200	183	167							
1200											1167	1000	900	800	700	600	500	467	400	367	333							
300													292	250	225	200	175	150	142	133	117	108	100	92	83			099
600													583	500	450	400	350	300	283	267	233	217	200	183	167			
1200													1167	1000	900	800	700	600	567	533	467	433	400	367	333			
300														250			225	200	175	167	158	142	133	125	117			107
600														500			450	400	350	333	317	283	267	250	233			
1200														1000			900	800	700	667	633	567	533	500	467			
1920														1600			1440	1280	1120	1067	1013	907	853	800	747			

Stroke(mm) & Maximum Speed(mm/s)*2

Speed

Stroke	25	100	150	200	250	300	350	400	450	500	550	600	650	700	750	800	850	900	950	1000	1050	1100	1150	1200	1250	1300	1350	Page
100																												099
300																												087

Spec Index of Electric Actuator

GTH Built - in Linear Motion Guide Ball Screw Actuator - Slider Type

Dual Carriage

Env.	Drive Type	Model No.	Motor Output (w)	Width (mm)	Repeatability (mm)	Ball Screw Spec		Maximum Payload(kg)		Max. Speed*1 (mm/s)
						Outer Dia.(mm)	Lead(mm)	Horizontal	Vertical	
		GTH4D	50W	44	±0.005	10	2	25	8	100
							6	20	5	360
							12	12	2	720
			100W				2	25	8	100
							6	20	8	360
							12	12	3.5	720
		GTH5D	100W	54	±0.005	12	2	30	10	100
							5	30	10	300
							10	15	5	600
							20	10	2.5	1200
		GTH8D	200W	82	±0.005	16	5	50	15	300
							10	30	8	600
			400W				20	18	3	1200
		GTH12D	400W	120	±0.005	16	5	110	33	300
							10	88	22	600
							20	40	10	1200
							32	30	8	1920

*1:The highest speed is based on the maximum servo motor's rpm (3000 or 3600).
*2:Max RPM is based on limitations of the ballnut or suggested servo motor limits.
*3:Max speed is based on max RPM of the ballscrew before whipping occurs. This could permanently damage the ballscrew.

Steel body

Env.	Drive Type	Model No.	Motor Output (w)	Width (mm)	Repeatability (mm)	Ball Screw Spec		Maximum Payload(kg)		Max. Speed*1 (mm/s)
						Outer Dia.(mm)	Lead(mm)	Horizontal	Vertical	
Standard Environment	Ball screw	GTH3K	30W	30	±0.005	6	2	13	5	100
							8	10	2	480
		GTH4K	50W	44	±0.005	10	2	25	8	100
							6	20	5	360
							12	8	2	720
			100W				2	25	8	100
							6	20	8	360
							12	12	3.5	720
		GTH5K	100W	54	±0.005	12	2	30	10	100
							5	30	10	300
							10	15	5	600
							20	10	2.5	1200
		GTH8K	200W	82	±0.005	16	5	50	15	300
							10	30	8	600
			400W				20	18	3	120

*1:The highest speed is based on the maximum servo motor's rpm (3000 or 3600).
*2:Max RPM is based on limitations of the ballnut or suggested servo motor limits.
*3:Max speed is based on max RPM of the ballscrew before whipping occurs. This could permanently damage the ballscrew.

MSITEC PRODUCTIVITY THROUGH TECHNOLOGY
Visit msitec.com
Call 866-397-7388
Email info@msitec.com

免費服務專線：大陸 China 400-875-0009 台灣 Taiwan 0800-800-893

Stroke(mm) & Maximum Speed(mm/s)*2																																				Page
Stroke	40	50	60	110	150	160	200	210	250	300	310	350	400	410	450	500	510	550	600	610	650	700	710	750	800	810	850	900	910	950	1040	1100				
		100														90	80		70	60		50	43		40	37		33								087
							360						330	320		270	240		210	180		150	130		120	110		100								
							720						660	640		540	480		420	360		300	260		240	220		200								
		100														90	80		70	60		50	43		40	37		33								
							360						330	320		270	240		210	180		150	130		120	110		100								
							720						660	640		540	480		420	360		300	260		240	220		200								
				100													90	80		70	60		50	47		40	37		33							095
								300						292	250		225	200		175	150		125	117		100	92		83							
								600						583	500		450	400		350	300		250	233		200	183		167							
								1200						1167	1000		900	800		700	600		500	467		400	367		333							
		300														292	250		225	200		175	150		142	133		117		108		100	92	83		099
		600														583	500		450	400		350	300		283	267		233		217		200	183	167		
		1200														1167	1000		900	800		700	600		567	533		467		433		400	367	333		
					300											250				225	200		175		167	158		142		133		125	117			107
					600											500				450	400		350		333	317		283		267		250	233			
					1200											1000				900	800		700		667	633		567		533		500	467			
					1920											1600				1440	1280		1120		1067	1013		907		853		800	747			

Stroke(mm) & Maximum Speed(mm/s)*2																														Page
Stroke	50	100	150	200	250	300	350	400	450	500	550	600	650	700	750	800	850	900	950	1000	1050	1100	1150	1200	1250	1300	1350		
	100																												
	480																												
		100										90	80	70	60	50													087
			360							330	320	270	240	210	180	150													
			720							660	640	540	480	420	360	300													
		100										90	80	70	60	50													
			360							330	320	270	240	210	180	150													
			720							660	640	540	480	420	360	300													
				100									90	80	70	60													095
					300						292	250	225	200	175	150													
					600						583	500	450	400	350	300													
					1200						1167	1000	900	800	700	600													
						300							292	250	225	200	175	150	142	133	117	108							099
						600							583	500	450	400	350	300	283	267	233	217							
						1200							1167	1000	900	800	700	600	567	533	467	433							

GTH3

▶ Integrated Linear Bearing ▶ Ball Screw Drive

The picture is just for the reference. Please check the the actual dimensions on the drawing.

Ordering Method

GTH3 - L2 - 100 - BC - X - C4 - 0001

Model | **Special Order No.**

Stroke

50-300mm
50mm increments

Ball Screw Lead

2	2mm
8	8mm

Motor Position

BC	Motor Exposed
BM	Motor Bottom Side
BL	Motor Left Side
BR	Motor Right Side
-*2	No Motor Position

Motor Flange、Power Output

With Motor Flange & Coupling				
M	Mitsubishi	03	30W	B
		05	-	
Y	Yaskawa	10	-	
		20	-	
		40	-	
X	Others*1			
Without Motor Flange & Coupling				
K	No Motor Flange & Coupling*2			

*1 When choosing non-standard motor X, the motor spec must be provided and confirmed by TOYO for installation before the order is established.

*2 When K is selected, the motor position need no description.

Home Sensor

Outside	
C	Motor Side
D	Opposite Motor Side
No Sensor	
E	No Sensor

*When the stroke is 50mm, the sensor installation has the following restrictions:

1.The home sensor and the limit sensor must be installed on different sides of the body.

2.The sensor trigger device must be installed on both sides of the device.

Limit Sensor

Outside	
3	1 Pc
4	2 Pc
No Sensor	
5	No Sensor

MSITEC PRODUCTIVITY THROUGH TECHNOLOGY
Visit msitec.com
Call 866-397-7388
Email info@msitec.com

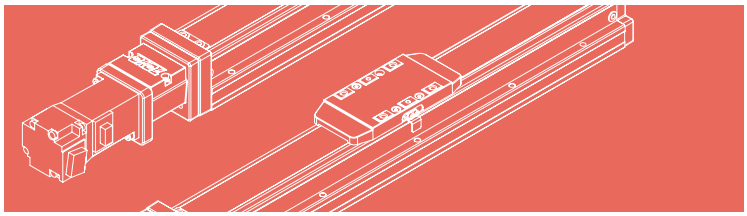

Specification

Item	Ball screw	Outer dia. & Precision grade		mm	Ø6 & C7	
		Lead		mm	2	8
		Maximum Rotating speed		rpm	3000	3600
		Maximum linear speed ※1		mm/s	100	480
		Basic dynamic load rating Ca		N	1811	862
		Basic static load rating Coa		N	2774	1099
		Load factor			1.2	1.35
	Linear Guide	Dynamic horizontal	100 Km of travel	kgf	321	
			1000 Km of travel	kgf	149	
			10000 Km of travel	kgf	69	
		Static horizontal		kg	684	
	Fixed bearing	Basic dynamic load rating Cr		N	1470	
		Static load rating Cor		N	535	
	Common Spec	Repeatability		mm	±0.005	
		Start torpue		N.cm	2	
		Allowable input torque		N.m	1.1	
		Maximum acceleration		m/s^2	10	
		Friction coefficient			0.03	
		Stroke (increments)		mm	50-300 (50 increments)	
		Ambient temperature ※2		°C	0~+40	

※1 Estimated max speed and max payload when using a standard 100W servo motor.
(Confirm max speed and payload at the same time.)

※2 Customized temperature:-20°C~ 80°C. special grease requirement need to follow customization process.

Static Loading Moment

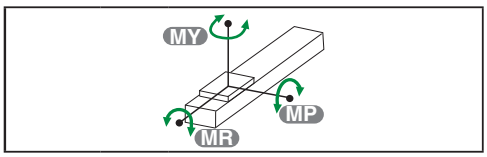

MY	N.m	39
MP	N.m	39
MR	N.m	44

Dynamic Loading Moment

Travel	km	100	1000	10000
MY	N.m	9.6	4.5	2.1
MP	N.m	9.6	4.5	2.1
MR	N.m	10.8	5.0	2.3

Parts list

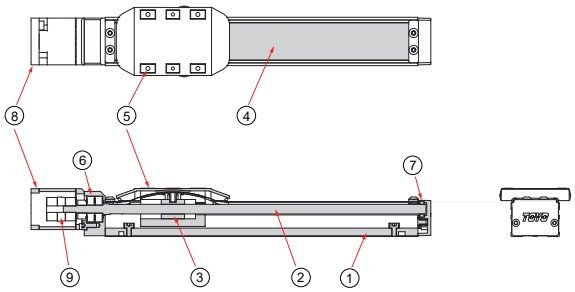

No.	Part Description	Material
1	Housing	AL6463
2	Ball Screw	S45C
3	Ball Screw Nut	S45C
4	Steel Band	SUS430
5	Carriage	SNCM21H
6	Ball Bearing Dual Arrangement	SUJ2
7	Ball Bearing	SUJ2
8	Fixed Support Block-Inline Motor Mounting Bracket	AL6061
9	Coupling- Clamping	AL6061

MSiTEC PRODUCTIVITY THROUGH TECHNOLOGY
Visit msitec.com
Call 866-397-7388
Email info@msitec.com

MSiTEC PRODUCTIVITY THROUGH TECHNOLOGY
Visit msitec.com
Call 866-397-7388
Email info@msitec.com

GTH3

▶ Integrated Linear Bearing ▶ Ball Screw Drive

MSiTEC PRODUCTIVITY THROUGH TECHNOLOGY
Visit msitec.com
Call 866-397-7388
Email info@msitec.com

BC Motor Exposed

2D CAD 3D CAD Download CAD data at www.toyorobot.com

Unit : mm

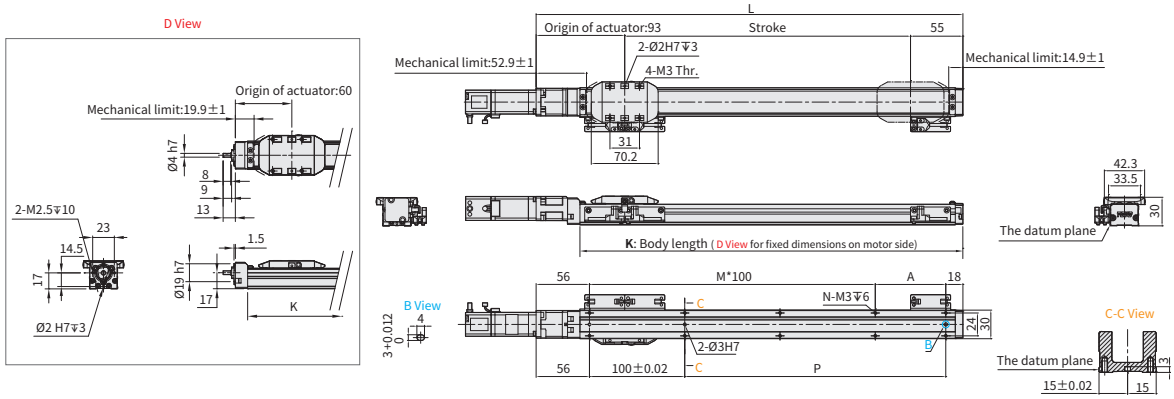

Stroke		50	100	150	200	250	300
Limit Stroke (±1)		60	110	160	210	260	310
L		198	248	298	348	398	448
A		24	74	24	74	24	74
M		1	1	2	2	3	3
N		6	6	8	8	10	10
P		24	74	124	174	224	274
KG※1		0. 29	0. 34	0. 4	0. 44	0. 49	0. 55
K		165	215	265	315	365	415
Linear Speed mm/s	Lead 2	100					
	Lead 8	480					

※1 KG refers to the weight with motor related accessories (excluding motor), not corresponding to K Type.

BM Motor Bottom Side

2D CAD 3D CAD Download CAD data at www.toyorobot.com

Unit : mm

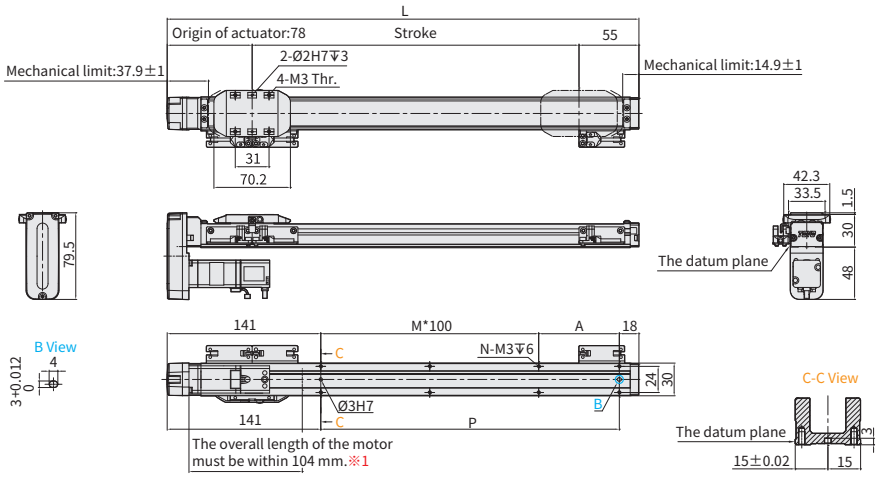

Stroke		50	100	150	200	250	300
Limit Stroke (±1)		60	110	160	210	260	310
L		183	233	283	333	383	433
A		24	74	24	74	24	74
M		0	0	1	1	2	2
N		4	4	6	6	8	8
P		24	74	124	174	224	274
KG		0. 38	0. 48	0. 57	0. 66	0. 76	0. 85
Linear Speed mm/s	Lead 2	100					
	Lead 8	480					

※1 When motor with brake assembled on lower side, or the total length over than spec limit, it may not use standard pinhole. Please contact our sales department if you need more information & requirement.

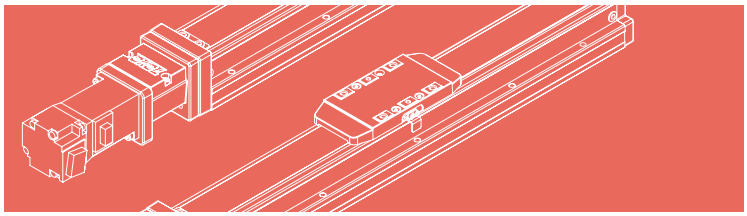

BR Motor Left Side

2D CAD 3D CAD Download CAD data at www.toyorobot.com

Unit : mm

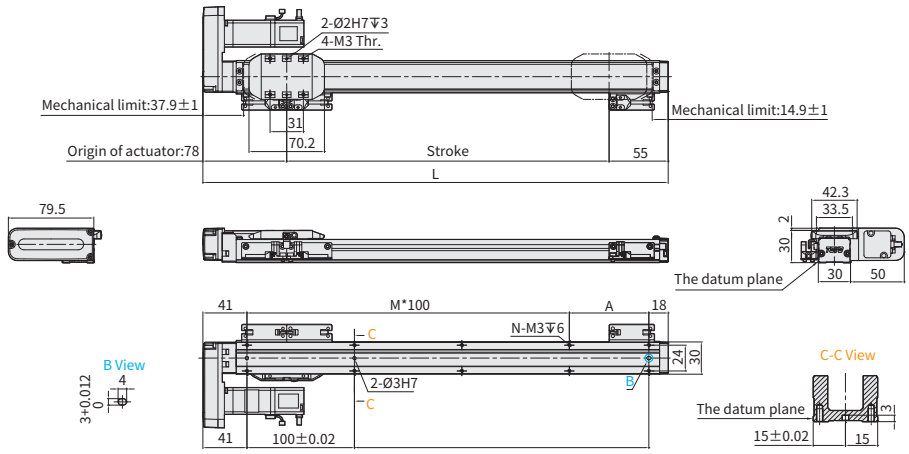

Stroke		50	100	150	200	250	300
Limit Stroke (±1)		60	110	160	210	260	310
L		183	233	283	333	383	433
A		24	74	24	74	24	74
M		1	1	2	2	3	3
N		6	6	8	8	10	10
P		24	74	124	174	224	274
KG		0. 38	0. 48	0. 57	0. 66	0. 76	0. 85
Linear Speed mm/s	Lead 2	100					
	Lead 8	480					

BL Motor Right Side

2D CAD 3D CAD Download CAD data at www.toyorobot.com

Unit : mm

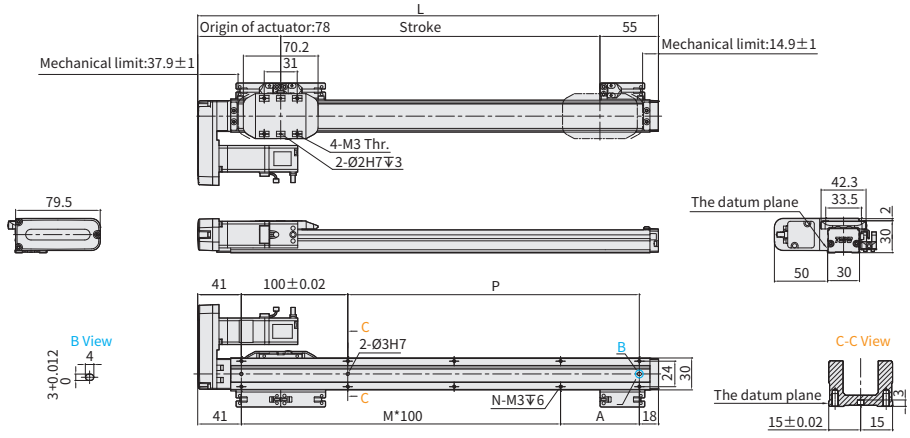

Stroke		50	100	150	200	250	300
Limit Stroke (±1)		60	110	160	210	260	310
L		198	248	298	348	398	448
A		24	74	24	74	24	74
M		1	1	2	2	3	3
N		6	6	8	8	10	10
P		24	74	124	174	224	274
KG		0. 38	0. 48	0. 57	0. 66	0. 76	0. 85
Linear Speed mm/s	Lead 2	100					
	Lead 8	480					

MSiTEC PRODUCTIVITY THROUGH TECHNOLOGY
Visit msitec.com
Call 866-397-7388
Email info@msitec.com

GTH4

▶ Integrated Linear Bearing ▶ Ball Screw Drive

The picture is just for the reference. Please check the the actual dimensions on the drawing.

Ordering Method

GTH4 - L2 - 100 - BC - X - C4 - 0001

Model | **Special Order No.**

Stroke

50-1000mm
50mm increments

Ball Screw Lead

2	2mm
6	6mm
12	12mm

Motor Position

BC	Motor Exposed
BM	Motor Bottom Side
BL	Motor Left Side
BR	Motor Right Side
-*2	No Motor Position

Motor Flange、Power Output

With Motor Flange & Coupling				
M	Mitsubishi	05	50W	B
P	Panasonic	10	-	
Y	Yaskawa	20	-	
T	Delta	40	-	
X	Others*1			
Without Motor Flange & Coupling				
K	No Motor Flange & Coupling*2			

*1 When choosing non-standard motor X, the motor spec must be provided and confirmed by TOYO for installation before the order is established.

*2 When K is selected, the motor position need no description.

Home Sensor

Outside	
C	Motor Side
D	Opposite Motor Side
No Sensor	
E	No Sensor

*When the stroke is 50mm, the sensor installation has the following restrictions:

1.The home sensor and the limit sensor must be installed on different sides of the body.

2.The sensor trigger device must be installed on both sides of the device.

Limit Sensor

Outside	
3	1 Pc
4	2 Pc
No Sensor	
5	No Sensor

MSiTEC PRODUCTIVITY THROUGH TECHNOLOGY
Visit msitec.com
Call 866-397-7388
Email info@msitec.com

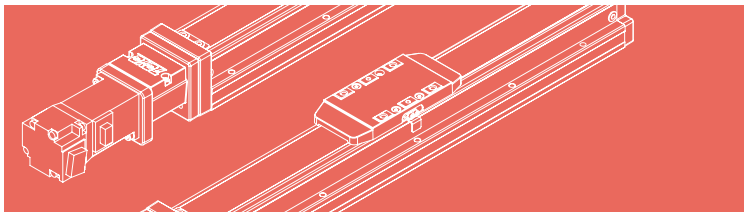

Specification

Item							
Ball screw	Outer dia. & Precision grade			mm	Ø10 & C7		
	Lead			mm	2	6	12
	Maximum Rotating speed			rpm	3000	3600	3600
	Maximum linear speed ※1			mm/s	100	360	720
	Basic dynamic load rating Ca			N	2265	2537	1740
	Basic static load rating Coa			N	4839	4569	3052
	Load factor				1.2	1.35	1.35
Linear Guide	Dynamic horizontal	100 Km of travel		kgf	493		
		1000 Km of travel		kgf	229		
		10000 Km of travel		kgf	106		
	Static horizontal			kg	1293		
Fixed bearing	Basic dynamic load rating Cr			N	1730		
	Static load rating Cor			N	3800		
Common Spec	Repeatability			mm	±0.005		
	Start torpue			N.cm	2		
	Allowable input torque			N.m	1.1		
	Maximum acceleration			m/s^2	10		
	Friction coefficient				0.03		
	Stroke (increments)			mm	50-1000 (50 increments)		
	Ambient temperature ※2			°C	0~+40		

※1 Estimated max speed and max payload when using a standard 100W servo motor.
(Confirm max speed and payload at the same time.)

※2 Customized temperature:-20°C~ 80°C. special grease requirement need to follow customization process.

Static Loading Moment

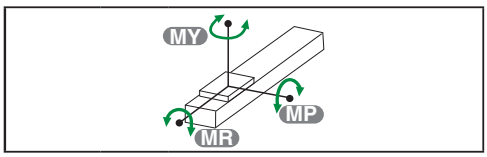

MY	N.m	79
MP	N.m	79
MR	N.m	116

Dynamic Loading Moment

Travel	km	100	1000	10000
MY	N.m	24.9	11.6	5.4
MP	N.m	24.9	11.6	5.4
MR	N.m	37.5	17.4	8.1

Parts list

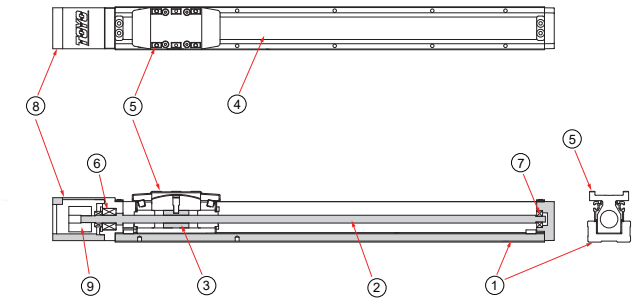

No.	Part Description	Material
1	Housing	AL6463
2	Ball Screw	S45C
3	Ball Screw Nut	S45C
4	Steel Band	SUS430
5	Carriage	SNCM21H
6	Ball Bearing Dual Arrangement	SUJ2
7	Ball Bearing	SUJ2
8	Fixed Support Block-Inline Motor Mounting Bracket	AL6061
9	Coupling- Clamping	AL6061

MSITEC PRODUCTIVITY THROUGH TECHNOLOGY
Visit msitec.com
Call 866-397-7388
Email info@msitec.com

BC Motor Exposed

2D CAD 3D CAD Download CAD data at www.toyorobot.com

Unit : mm

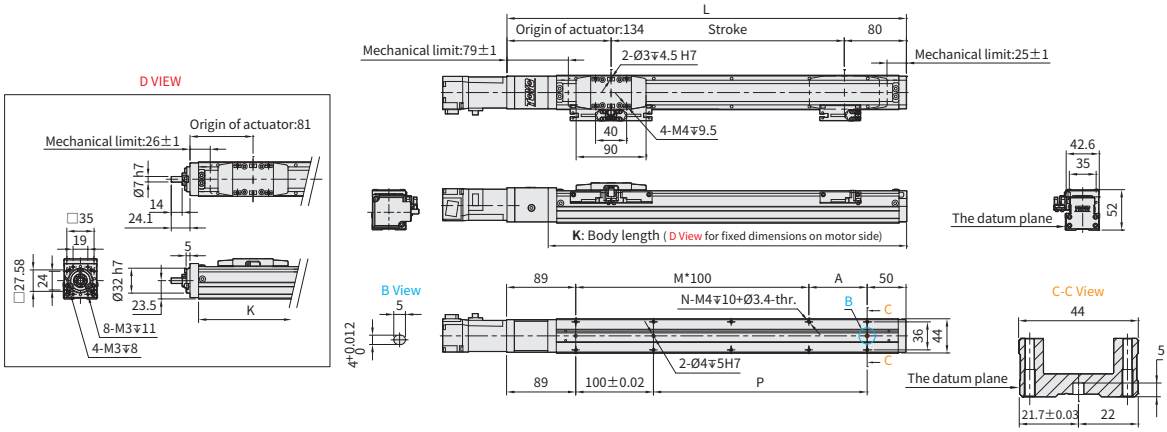

Stroke		50※2	100	150	200	250	300	350	400	450	500	550	600	650	700	750	800	850	900	950	1000
Limit Stroke (±1)		70	120	170	220	270	320	370	420	470	520	570	620	670	720	770	820	870	920	970	1020
L		264	314	364	414	464	514	564	614	664	714	764	814	864	914	964	1014	1064	1114	1164	1214
A		25	75	25	75	25	75	25	75	25	75	25	75	25	75	25	75	25	75	25	75
M		1	1	2	2	3	3	4	4	5	5	6	6	7	7	8	8	9	9	10	10
N		6	6	8	8	10	10	12	12	14	14	16	16	18	18	20	20	22	22	24	24
P		25	75	125	175	225	275	325	375	425	475	525	575	625	675	725	775	825	875	925	975
KG※1		1.23	1.41	1.59	1.77	1.95	2.13	2.31	2.49	2.67	2.85	3.03	3.21	3.39	3.57	3.75	3.93	3.81	4	4.18	4.36
K		211	261	311	361	411	461	511	561	611	661	711	761	811	861	911	961	1011	1061	1111	1161
Linear Speed mm/s	Lead 2	100											90	80	70	60	50	43	40	37	33
	Lead 6	360									330	320	270	240	210	180	150	130	120	110	100
	Lead 12	720									660	640	540	480	420	360	300	260	240	220	200

※1 KG refers to the weight with motor related accessories (excluding motor), not corresponding to K Type.
※2 When the stroke is 50mm, if fixing the body from the top to the bottom, the fixing hole will be blocked by slider and only can be uses 4 screws to fix;as a result, suggest that fixing actuator body from the bottom to the top.

BM Motor Bottom Side

2D CAD 3D CAD Download CAD data at www.toyorobot.com

Unit : mm

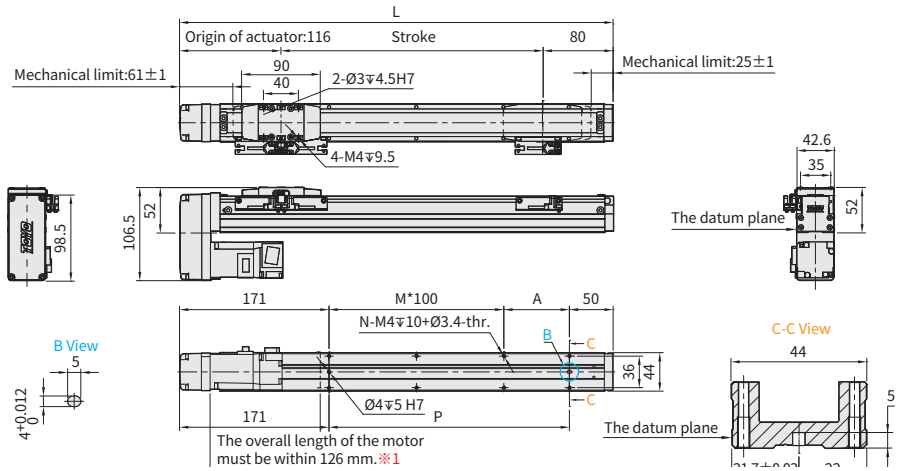

Stroke		50※2	100	150	200	250	300	350	400	450	500	550	600	650	700	750	800	850	900	950	1000
Limit Stroke (±1)		70	120	170	220	270	320	370	420	470	520	570	620	670	720	770	820	870	920	970	1020
L		246	296	346	396	446	496	546	596	646	696	746	796	846	896	946	996	1046	1096	1146	1196
A		25	75	25	75	25	75	25	75	25	75	25	75	25	75	25	75	25	75	25	75
M		0	0	1	1	2	2	3	3	4	4	5	5	6	6	7	7	8	8	9	9
N		4	4	6	6	8	8	10	10	12	12	14	14	16	16	18	18	20	20	22	22
P		25	75	125	175	225	275	325	375	425	475	525	575	625	675	725	775	825	875	925	975
KG		1.04	1.22	1.4	1.58	1.76	1.94	2.12	2.3	2.48	2.66	2.84	3.02	3.2	3.38	3.56	3.74	3.92	4.1	4.28	4.46
Linear Speed mm/s	Lead 2	100											90	80	70	60	50	43	40	37	33
	Lead 6	360									330	320	270	240	210	180	150	130	120	110	100
	Lead 12	720									660	640	540	480	420	360	300	260	240	220	200

※1 When motor with brake assembled on lower side, or the total length over than spec limit, it may not use standard pinhole. Please contact our sales department if you need more information & requirement.
※2 When the stroke is 50mm, if fixing the body from the top to the bottom, the fixing hole will be blocked by slider and only can be uses 4 screws to fix;as a result, suggest that fixing actuator body from the bottom to the top.

MSITEC PRODUCTIVITY THROUGH TECHNOLOGY
Visit msitec.com
Call 866-397-7388
Email info@msitec.com

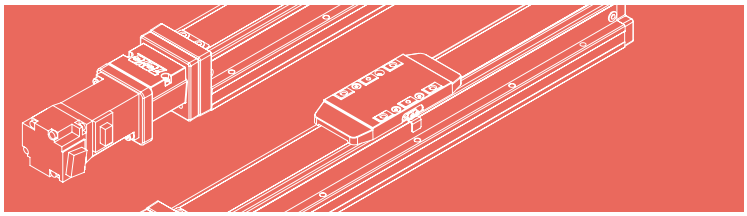

BR Motor Left Side

2D CAD 3D CAD Download CAD data at www.toyorobot.com

Unit : mm

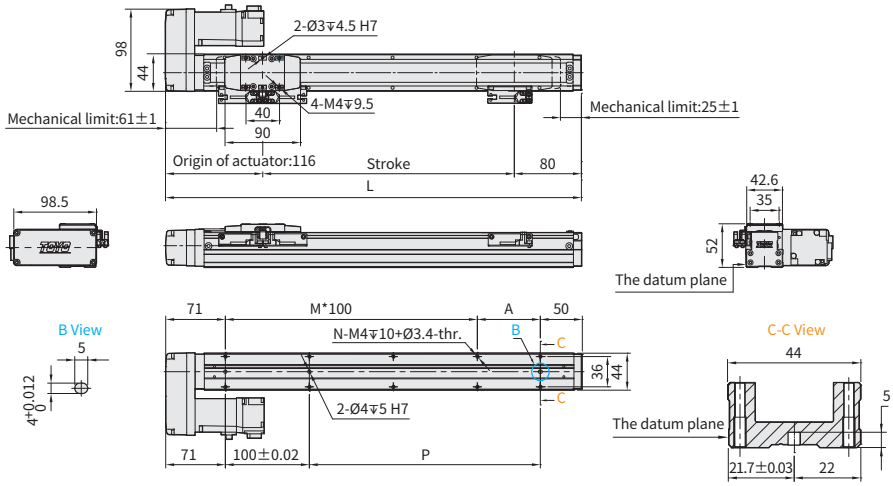

Stroke		50※2	100	150	200	250	300	350	400	450	500	550	600	650	700	750	800	850	900	950	1000
Limit Stroke (±1)		70	120	170	220	270	320	370	420	470	520	570	620	670	720	770	820	870	920	970	1020
L		246	296	346	396	446	496	546	596	646	696	746	796	846	896	946	996	1046	1096	1146	1196
A		25	75	25	75	25	75	25	75	25	75	25	75	25	75	25	75	25	75	25	75
M		1	1	2	2	3	3	4	4	5	5	6	6	7	7	8	8	9	9	10	10
N		6	6	8	8	10	10	12	12	14	14	16	16	18	18	20	20	22	22	24	24
P		25	75	125	175	225	275	325	375	425	475	525	575	625	675	725	775	825	875	925	975
KG		1.04	1.22	1.4	1.58	1.76	1.94	2.12	2.3	2.48	2.66	2.84	3.02	3.2	3.38	3.56	3.74	3.92	4.1	4.28	4.46
Linear Speed mm/s	Lead 2	100											90	80	70	60	50	43	40	37	33
	Lead 6	360									330	320	270	240	210	180	150	130	120	110	100
	Lead 12	720									660	640	540	480	420	360	300	260	240	220	200

※2 When the stroke is 50mm, if fixing the body from the top to the bottom, the fixing hole will be blocked by slider and only can be uses 4 screws to fix;as a result, suggest that fixing actuator body from the bottom to the top.

BL Motor Right Side

2D CAD 3D CAD Download CAD data at www.toyorobot.com

Unit : mm

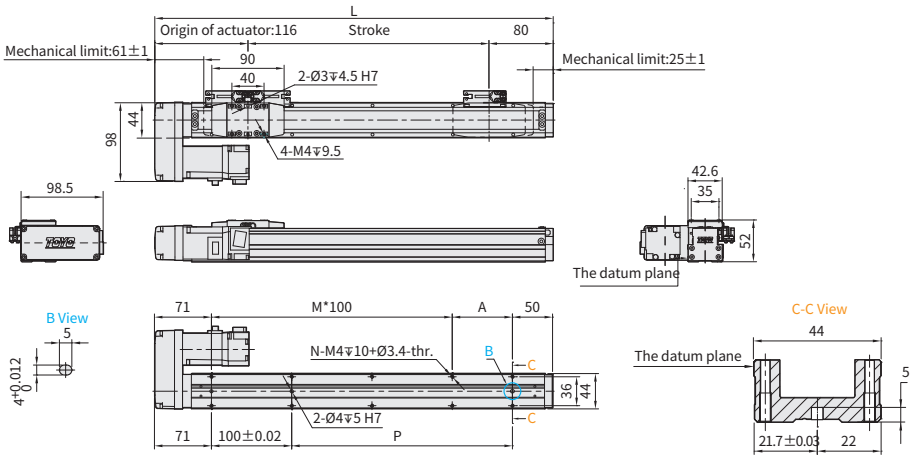

Stroke		50※2	100	150	200	250	300	350	400	450	500	550	600	650	700	750	800	850	900	950	1000
Limit Stroke (±1)		70	120	170	220	270	320	370	420	470	520	570	620	670	720	770	820	870	920	970	1020
L		246	296	346	396	446	496	546	596	646	696	746	796	846	896	946	996	1046	1096	1146	1196
A		25	75	25	75	25	75	25	75	25	75	25	75	25	75	25	75	25	75	25	75
M		1	1	2	2	3	3	4	4	5	5	6	6	7	7	8	8	9	9	10	10
N		6	6	8	8	10	10	12	12	14	14	16	16	18	18	20	20	22	22	24	24
P		25	75	125	175	225	275	325	375	425	475	525	575	625	675	725	775	825	875	925	975
KG		1.04	1.22	1.4	1.58	1.76	1.94	2.12	2.3	2.48	2.66	2.84	3.02	3.2	3.38	3.56	3.74	3.92	4.1	4.28	4.46
Linear Speed mm/s	Lead 2	100											90	80	70	60	50	43	40	37	33
	Lead 6	360									330	320	270	240	210	180	150	130	120	110	100
	Lead 12	720									660	640	540	480	420	360	300	260	240	220	200

※2 When the stroke is 50mm, if fixing the body from the top to the bottom, the fixing hole will be blocked by slider and only can be uses 4 screws to fix;as a result, suggest that fixing actuator body from the bottom to the top.

MSITEC PRODUCTIVITY THROUGH TECHNOLOGY
Visit msitec.com
Call 866-397-7388
Email info@msitec.com

GTH4

▶ Integrated Linear Bearing ▶ Ball Screw Drive

The picture is just for the reference. Please check the the actual dimensions on the drawing.

Ordering Method

GTH4 - L2 - 100 - BC - X - C4 - 0001

Model | **Stroke** | **Motor Position** | **Motor Flange、Power Output** | **Home Sensor** | **Limit Sensor** | **Special Order No.**

Stroke

50-1000mm
50mm increments

Ball Screw Lead

2	2mm
6	6mm
12	12mm

Motor Position

BC	Motor Exposed
BM	Motor Bottom Side
BL	Motor Left Side
BR	Motor Right Side
-*2	No Motor Position

Motor Flange、Power Output

With Motor Flange & Coupling				
M	Mitsubishi	05	-	B
P	Panasonic	10	100W	
Y	Yaskawa	20	-	
T	Delta	40	-	
X	Others*1			
Without Motor Flange & Coupling				
K	No Motor Flange & Coupling*2			

*1 When choosing non-standard motor X, the motor spec must be provided and confirmed by TOYO for installation before the order is established.

*2 When K is selected, the motor position need no description.

Home Sensor

Outside	
C	Motor Side
D	Opposite Motor Side
No Sensor	
E	No Sensor

*When the stroke is 50mm, the sensor installation has the following restrictions:

1.The home sensor and the limit sensor must be installed on different sides of the body.

2.The sensor trigger device must be installed on both sides of the device.

Limit Sensor

Outside	
3	1 Pc
4	2 Pc
No Sensor	
5	No Sensor

MSiTEC PRODUCTIVITY THROUGH TECHNOLOGY
Visit msitec.com
Call 866-397-7388
Email info@msitec.com

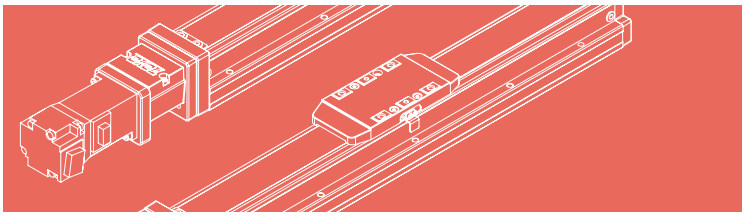

Specification

Item							
Ball screw	Outer dia. & Precision grade			mm	Ø10 & C7		
	Lead			mm	2	6	12
	Maximum Rotating speed			rpm	3000	3600	3600
	Maximum linear speed ※1			mm/s	100	360	720
	Basic dynamic load rating Ca			N	2265	2537	1740
	Basic static load rating Coa			N	4839	4569	3052
	Load factor				1.2	1.35	1.35
Linear Guide	Dynamic horizontal	100 Km of travel		kgf	493		
		1000 Km of travel		kgf	229		
		10000 Km of travel		kgf	106		
	Static horizontal			kg	1293		
Fixed bearing	Basic dynamic load rating Cr			N	1730		
	Static load rating Cor			N	3800		
Common Spec	Repeatability			mm	±0.005		
	Start torpue			N.cm	2		
	Allowable input torque			N.m	1.1		
	Maximum acceleration			m/s^2	10		
	Friction coefficient				0.03		
	Stroke interval			mm	50-1000		
	Ambient temperature ※2			°C	0~+40		

※1 Estimated max speed and max payload when using a standard 100W servo motor.
(Confirm max speed and payload at the same time.)

※2 Customized temperature:-20°C~ 80°C. special grease requirement need to follow customization process.

Static Loading Moment

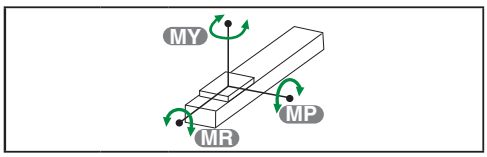

MY	N.m	79
MP	N.m	79
MR	N.m	116

Dynamic Loading Moment

Travel	km	100	1000	10000
MY	N.m	24.9	11.6	5.4
MP	N.m	24.9	11.6	5.4
MR	N.m	37.5	17.4	8.1

Parts list

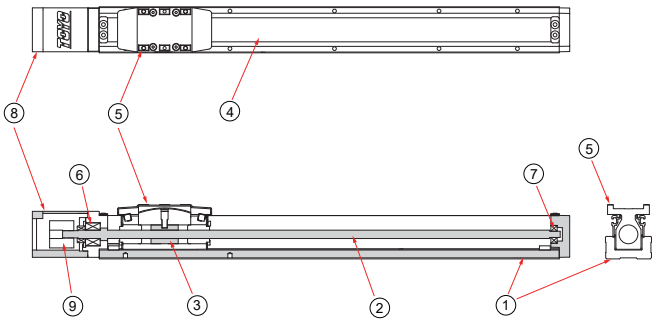

No.	Part Description	Material
1	Housing	AL6463
2	Ball Screw	S45C
3	Ball Screw Nut	S45C
4	Steel Band	SUS430
5	Carriage	SNCM21H
6	Ball Bearing Dual Arrangement	SUJ2
7	Ball Bearing	SUJ2
8	Fixed Support Block-Inline Motor Mounting Bracket	AL6061
9	Coupling- Clamping	AL6061

MSiTEC PRODUCTIVITY THROUGH TECHNOLOGY
Visit msitec.com
Call 866-397-7388
Email info@msitec.com

GTH4

▶ Integrated Linear Bearing ▶ Ball Screw Drive

BC Motor Exposed

2D CAD 3D CAD Download CAD data at www.toyorobot.com

Unit : mm

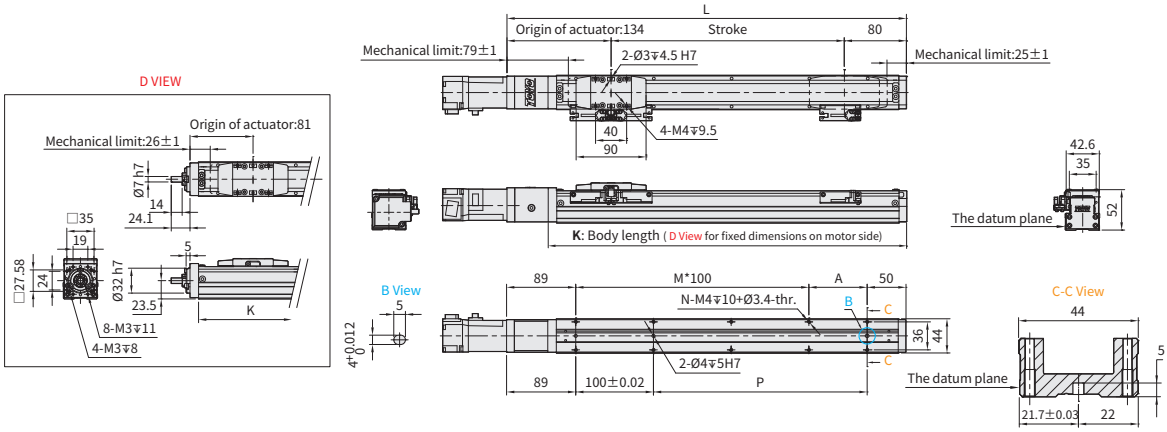

Stroke		50※2	100	150	200	250	300	350	400	450	500	550	600	650	700	750	800	850	900	950	1000
Limit Stroke (±1)		70	120	170	220	270	320	370	420	470	520	570	620	670	720	770	820	870	920	970	1020
L		264	314	364	414	464	514	564	614	664	714	764	814	864	914	964	1014	1064	1114	1164	1214
A		25	75	25	75	25	75	25	75	25	75	25	75	25	75	25	75	25	75	25	75
M		1	1	2	2	3	3	4	4	5	5	6	6	7	7	8	8	9	9	10	10
N		6	6	8	8	10	10	12	12	14	14	16	16	18	18	20	20	22	22	24	24
P		25	75	125	175	225	275	325	375	425	475	525	575	625	675	725	775	825	875	925	975
KG※1		1.23	1.41	1.59	1.77	1.95	2.13	2.31	2.49	2.67	2.85	3.03	3.21	3.39	3.57	3.75	3.93	3.81	4	4.18	4.36
K		211	261	311	361	411	461	511	561	611	661	711	761	811	861	911	961	1011	1061	1111	1161
Linear Speed mm/s	Lead 2	100											90	80	70	60	50	43	40	37	33
	Lead 6	360									330	320	270	240	210	180	150	130	120	110	100
	Lead 12	720									660	640	540	480	420	360	300	260	240	220	200

※1 KG refers to the weight with motor related accessories (excluding motor), not corresponding to K Type.
※2 When the stroke is 50mm, if fixing the body from the top to the bottom, the fixing hole will be blocked by slider and only can be uses 4 screws to fix;as a result, suggest that fixing actuator body from the bottom to the top.

BM Motor Bottom Side

2D CAD 3D CAD Download CAD data at www.toyorobot.com

Unit : mm

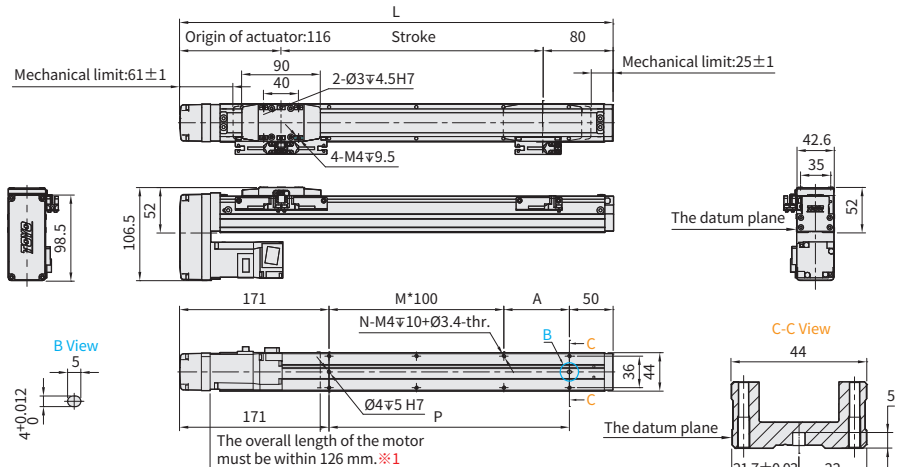

Stroke		50※2	100	150	200	250	300	350	400	450	500	550	600	650	700	750	800	850	900	950	1000
Limit Stroke (±1)		70	120	170	220	270	320	370	420	470	520	570	620	670	720	770	820	870	920	970	1020
L		246	296	346	396	446	496	546	596	646	696	746	796	846	896	946	996	1046	1096	1146	1196
A		25	75	25	75	25	75	25	75	25	75	25	75	25	75	25	75	25	75	25	75
M		0	0	1	1	2	2	3	3	4	4	5	5	6	6	7	7	8	8	9	9
N		4	4	6	6	8	8	10	10	12	12	14	14	16	16	18	18	20	20	22	22
P		25	75	125	175	225	275	325	375	425	475	525	575	625	675	725	775	825	875	925	975
KG		1.04	1.22	1.4	1.58	1.76	1.94	2.12	2.3	2.48	2.66	2.84	3.02	3.2	3.38	3.56	3.74	3.92	4.1	4.28	4.46
Linear Speed mm/s	Lead 2	100											90	80	70	60	50	43	40	37	33
	Lead 6	360									330	320	270	240	210	180	150	130	120	110	100
	Lead 12	720									660	640	540	480	420	360	300	260	240	220	200

※1 When motor with brake assembled on lower side, or the total length over than spec limit, it may not use standard pinhole. Please contact our sales department if you need more information & requirement.
※2 When the stroke is 50mm, if fixing the body from the top to the bottom, the fixing hole will be blocked by slider and only can be uses 4 screws to fix;as a result, suggest that fixing actuator body from the bottom to the top.

MSITEC PRODUCTIVITY THROUGH TECHNOLOGY
Visit msitec.com
Call 866-397-7388
Email info@msitec.com

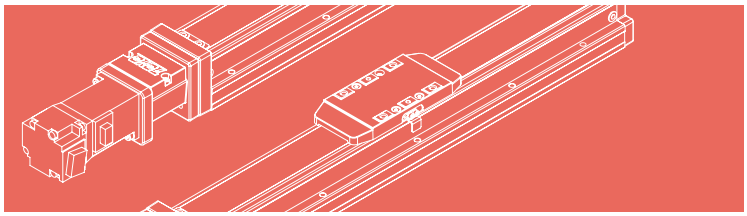

BR Motor Left Side

2D CAD 3D CAD Download CAD data at www.toyorobot.com

Unit : mm

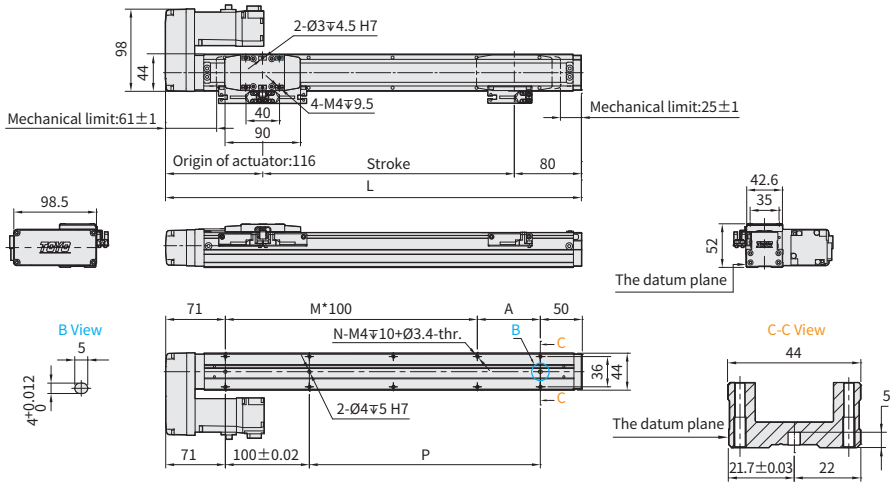

Stroke		50※2	100	150	200	250	300	350	400	450	500	550	600	650	700	750	800	850	900	950	1000
Limit Stroke (±1)		70	120	170	220	270	320	370	420	470	520	570	620	670	720	770	820	870	920	970	1020
L		246	296	346	396	446	496	546	596	646	696	746	796	846	896	946	996	1046	1096	1146	1196
A		25	75	25	75	25	75	25	75	25	75	25	75	25	75	25	75	25	75	25	75
M		1	1	2	2	3	3	4	4	5	5	6	6	7	7	8	8	9	9	10	10
N		6	6	8	8	10	10	12	12	14	14	16	16	18	18	20	20	22	22	24	24
P		25	75	125	175	225	275	325	375	425	475	525	575	625	675	725	775	825	875	925	975
KG		1.04	1.22	1.4	1.58	1.76	1.94	2.12	2.3	2.48	2.66	2.84	3.02	3.2	3.38	3.56	3.74	3.92	4.1	4.28	4.46
Linear Speed mm/s	Lead 2	100											90	80	70	60	50	43	40	37	33
	Lead 6	360									330	320	270	240	210	180	150	130	120	110	100
	Lead 12	720									660	640	540	480	420	360	300	260	240	220	200

※2 When the stroke is 50mm, if fixing the body from the top to the bottom, the fixing hole will be blocked by slider and only can be uses 4 screws to fix;as a result, suggest that fixing actuator body from the bottom to the top.

BL Motor Right Side

2D CAD 3D CAD Download CAD data at www.toyorobot.com

Unit : mm

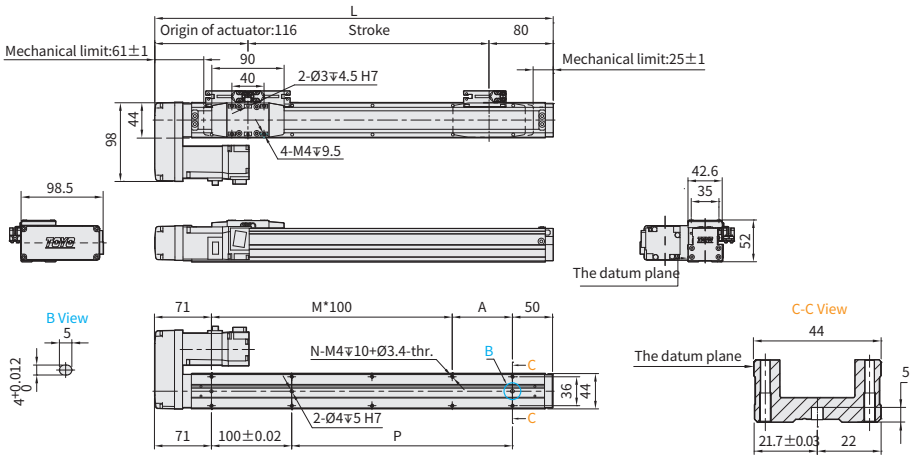

Stroke		50※2	100	150	200	250	300	350	400	450	500	550	600	650	700	750	800	850	900	950	1000
Limit Stroke (±1)		70	120	170	220	270	320	370	420	470	520	570	620	670	720	770	820	870	920	970	1020
L		246	296	346	396	446	496	546	596	646	696	746	796	846	896	946	996	1046	1096	1146	1196
A		25	75	25	75	25	75	25	75	25	75	25	75	25	75	25	75	25	75	25	75
M		1	1	2	2	3	3	4	4	5	5	6	6	7	7	8	8	9	9	10	10
N		6	6	8	8	10	10	12	12	14	14	16	16	18	18	20	20	22	22	24	24
P		25	75	125	175	225	275	325	375	425	475	525	575	625	675	725	775	825	875	925	975
KG		1.04	1.22	1.4	1.58	1.76	1.94	2.12	2.3	2.48	2.66	2.84	3.02	3.2	3.38	3.56	3.74	3.92	4.1	4.28	4.46
Linear Speed mm/s	Lead 2	100											90	80	70	60	50	43	40	37	33
	Lead 6	360									330	320	270	240	210	180	150	130	120	110	100
	Lead 12	720									660	640	540	480	420	360	300	260	240	220	200

※2 When the stroke is 50mm, if fixing the body from the top to the bottom, the fixing hole will be blocked by slider and only can be uses 4 screws to fix;as a result, suggest that fixing actuator body from the bottom to the top.

MSITEC PRODUCTIVITY THROUGH TECHNOLOGY
Visit msitec.com
Call 866-397-7388
Email info@msitec.com

GTH5

▶ Integrated Linear Bearing ▶ Ball Screw Drive

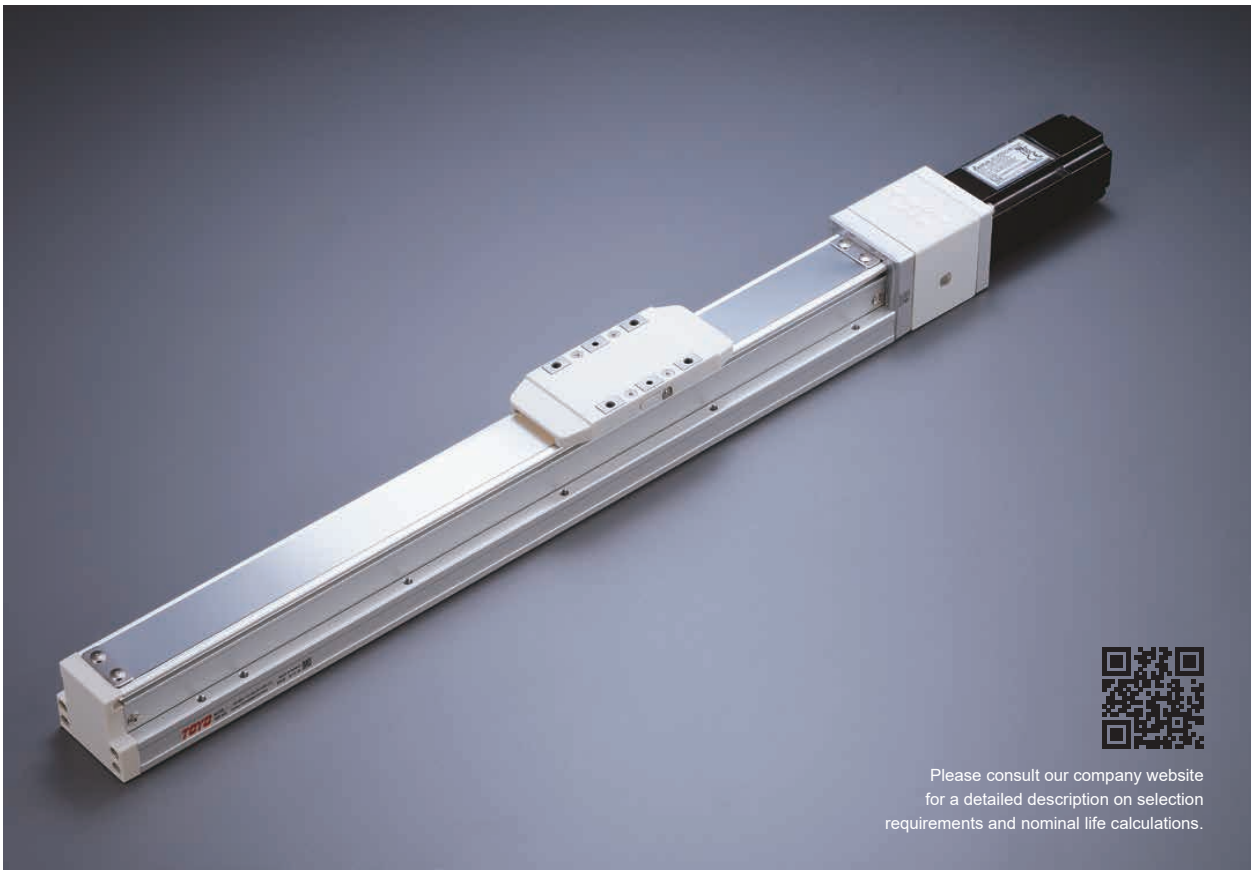

The picture is just for the reference. Please check the the actual dimensions on the drawing.

Ordering Method

GTH5 - L 5 - 100 - BC - X - C4 - 0001

Model | **Special Order No.**

Ballscrew Accuracy Grade

L	Rolled Ballscrews
C	Ground Ballscrews

*C precision-level ground ball screws are not available in all stroke lengths, please consult the model datasheet.

Stroke

Rolled Ballscrews
50-1050mm(50mm increments)
Ground Ballscrews
50-300mm(50mm increments)

Ball Screw Lead

2	2mm
5	5mm
10	10mm
20	20mm

Motor Position

BC	Motor Exposed
BM	Motor Bottom Side
BL	Motor Left Side
BR	Motor Right Side
-*2	No Motor Position

Motor Flange、Power Output

With Motor Flange & Coupling				
M	Mitsubishi	05	-	B
P	Panasonic	10	100W	
Y	Yaskawa	20	-	
T	Delta	40	-	
X	Others*1			
Without Motor Flange & Coupling				
K	No Motor Flange & Coupling*2			

*1 When choosing non-standard motor X, the motor spec must be provided and confirmed by TOYO for installation before the order is established.

*2 When K is selected, the motor position need no description.

Home Sensor

Outside	
C	Motor Side
D	Opposite Motor Side
No Sensor	
E	No Sensor

*When the stroke is 50mm, the sensor installation has the following restrictions:

1.The home sensor and the limit sensor must be installed on different sides of the body.

2.The sensor trigger device must be installed on both sides of the device.

Limit Sensor

Outside	
3	1 Pc
4	2 Pc
No Sensor	
5	No Sensor

MSiTEC PRODUCTIVITY THROUGH TECHNOLOGY
Visit msitec.com
Call 866-397-7388
Email info@msitec.com

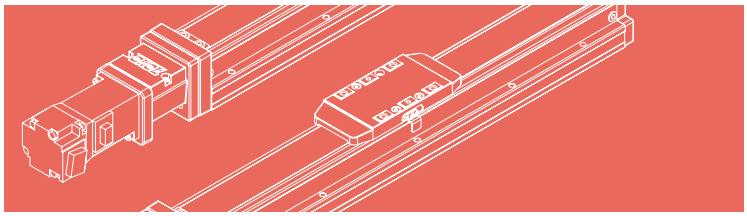

Specification

Item	Ball Screw Spec.	Ballscrew Accuracy Grade Code		L	C
		Ballscrew Accuracy Grade		C7 Rolled Ballscrews	C5 Ground Ballscrews
		Repeatability	mm	±0.005	±0.003
		Stroke (increments)	mm	50-1050mm (50 increments)	50-300mm (50 increments)

Item	Ball screw	Outer dia. & Precision grade	mm	ø12 & C7			
		Lead	mm	2	5	10	20
		Maximum Rotating speed	rpm	3000	3600	3600	3600
		Maximum linear speed ※1	mm/s	100	300	600	1200
		Basic dynamic load rating Ca	N	2411	4829	4680	11284
		Basic static load rating Coa	N	5779	7836	7649	20410
		Load factor		1.2	1.2	1.35	1.35
	Linear Guide	Dynamic horizontal: 100 Km of travel	kgf	602			
		Dynamic horizontal: 1000 Km of travel	kgf	279			
		Dynamic horizontal: 10000 Km of travel	kgf	130			
		Static horizontal	kg	1724			
	Fixed bearing	Basic dynamic load rating Cr	N	1730			
		Static load rating Cor	N	3800			
	Common Spec	Start torpue	N.cm	7			
		Allowable input torque	N.m	1.1			
		Maximum acceleration	m/s^2	10			
		Friction coefficient		0.03			
		Ambient temperature※2	°C	0~+40			

※1 Estimated max speed and max payload when using a standard 100W servo motor.
(Confirm max speed and payload at the same time.)

※2 Customized temperature:-20°C~ 80°C. special grease requirement need to follow customization process.

Static Loading Moment

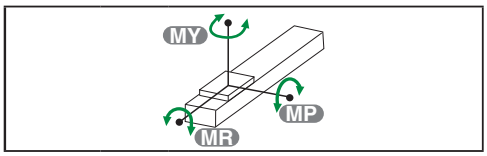

MY	N.m	103
MP	N.m	103
MR	N.m	144

Dynamic Loading Moment

Travel	km	100	1000	10000
MY	N.m	40.8	18.9	8.8
MP	N.m	40.8	18.9	8.8
MR	N.m	58.8	27.2	12.6

Parts list

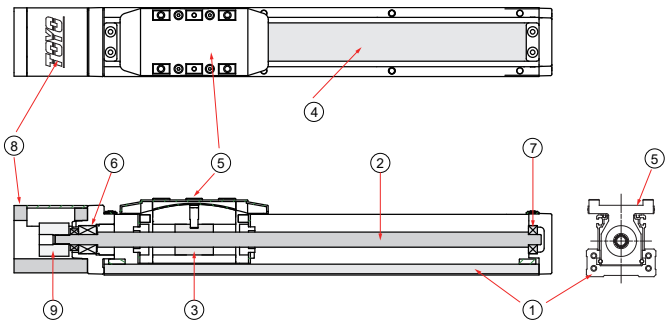

No.	Part Description	Material
1	Housing	AL6463
2	Ball Screw	S45C
3	Ball Screw Nut	S45C
4	Steel Band	SUS430
5	Carriage	SNCM21H
6	Ball Bearing Dual Arrangement	SUJ2
7	Ball Bearing	SUJ2
8	Fixed Support Block-Inline Motor Mounting Bracket	AL6061
9	Coupling- Clamping	AL6061

MSITEC PRODUCTIVITY THROUGH TECHNOLOGY
Visit msitec.com
Call 866-397-7388
Email info@msitec.com

BC Motor Exposed

2D CAD 3D CAD Download CAD data at www.toyorobot.com

Unit : mm

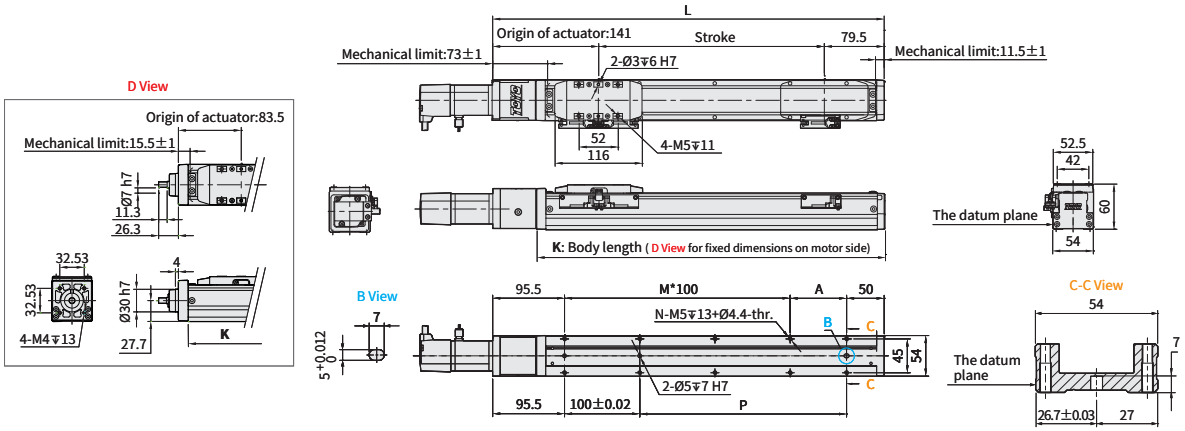

Stroke		50※2	100	150	200	250	300	350	400	450	500	550	600	650	700	750	800	850	900	950	1000	1050
Limit Stroke (±1)		70	120	170	220	270	320	370	420	470	520	570	620	670	720	770	820	870	920	970	1020	1070
L		270.5	320.5	370.5	420.5	470.5	520.5	570.5	620.5	670.5	720.5	770.5	820.5	870.5	920.5	970.5	1020.5	1070.5	1120.5	1170.5	1220.5	1270.5
A		25	75	25	75	25	75	25	75	25	75	25	75	25	75	25	75	25	75	25	75	25
M		1	1	2	2	3	3	4	4	5	5	6	6	7	7	8	8	9	9	10	10	11
N		6	6	8	8	10	10	12	12	14	14	16	16	18	18	20	20	22	22	24	24	26
P		25	75	125	175	225	275	325	375	425	475	525	575	625	675	725	775	825	875	925	975	1025
KG※1		1.65	1.79	1.92	2.11	2.39	2.5	2.52	2.75	2.86	2.95	3.15	3.28	3.44	3.58	3.71	4.09	4.47	4.85	5.23	5.61	6
K		213	263	313	363	413	463	513	563	613	663	713	763	813	863	913	963	1013	1063	1113	1163	1213
Linear Speed mm/s	Lead 2	100												90	80	70	60	50	47	40	37	33
	Lead 5	300										292	250	225	200	175	150	125	117	100	92	83
	Lead 10	600										583	500	450	400	350	300	250	233	200	183	167
	Lead 20	1200										1167	1000	900	800	700	600	500	467	400	367	333

※1 KG refers to the weight with motor related accessories (excluding motor), not corresponding to K Type.
※2 When the stroke is 50mm, if fixing the body from the top to the bottom, the fixing hole will be blocked by slider and only can be uses 4 screws to fix;as a result, suggest that fixing actuator body from the bottom to the top.

BM Motor Bottom Side

2D CAD 3D CAD Download CAD data at www.toyorobot.com

Unit : mm

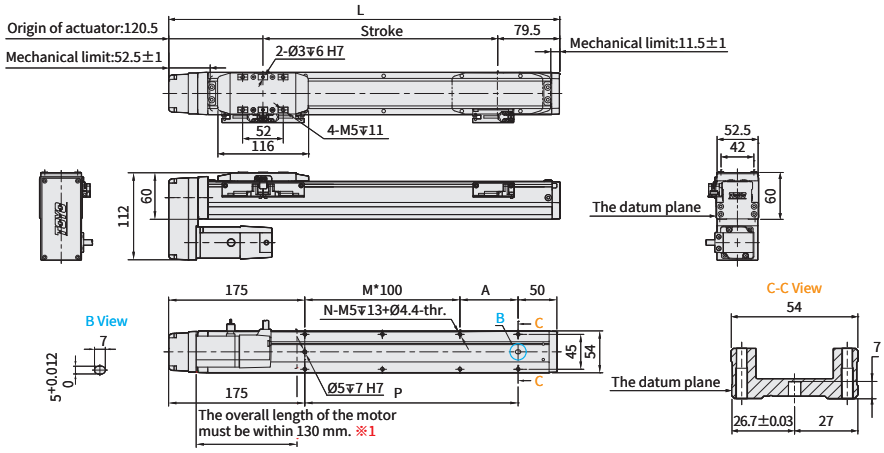

Stroke		50※2	100	150	200	250	300	350	400	450	500	550	600	650	700	750	800	850	900	950	1000	1050
Limit Stroke (±1)		70	120	170	220	270	320	370	420	470	520	570	620	670	720	770	820	870	920	970	1020	1070
L		250	300	350	400	450	500	550	600	650	700	750	800	850	900	950	1000	1050	1100	1150	1200	1250
A		25	75	25	75	25	75	25	75	25	75	25	75	25	75	25	75	25	75	25	75	25
M		0	0	1	1	2	2	3	3	4	4	5	5	6	6	7	7	8	8	9	9	10
N		4	4	6	6	8	8	10	10	12	12	14	14	16	16	18	18	20	20	22	22	24
P		25	75	125	175	225	275	325	375	425	475	525	575	625	675	725	775	825	875	925	975	1025
KG		1.68	1.8	2.03	2.14	2.42	2.53	2.58	2.78	2.89	2.98	3.18	3.31	3.47	3.6	3.74	4.12	4.5	4.88	5.26	5.64	6.02
Linear Speed mm/s	Lead 2	100												90	80	70	60	50	47	40	37	33
	Lead 5	300										292	250	225	200	175	150	125	117	100	92	83
	Lead 10	600										583	500	450	400	350	300	250	233	200	183	167
	Lead 20	1200										1167	1000	900	800	700	600	500	467	400	367	333

※1 When motor with brake assembled on lower side, or the total length over than spec limit, it may not use standard pinhole. Please contact our sales department if you need more information & requirement.
※2 When the stroke is 50mm, if fixing the body from the top to the bottom, the fixing hole will be blocked by slider and only can be uses 4 screws to fix;as a result, suggest that fixing actuator body from the bottom to the top.

MSITEC PRODUCTIVITY THROUGH TECHNOLOGY
Visit msitec.com
Call 866-397-7388
Email info@msitec.com

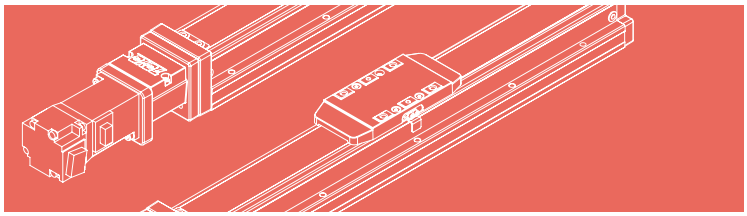

BR Motor Left Side

2D CAD 3D CAD Download CAD data at www.toyorobot.com

Unit : mm

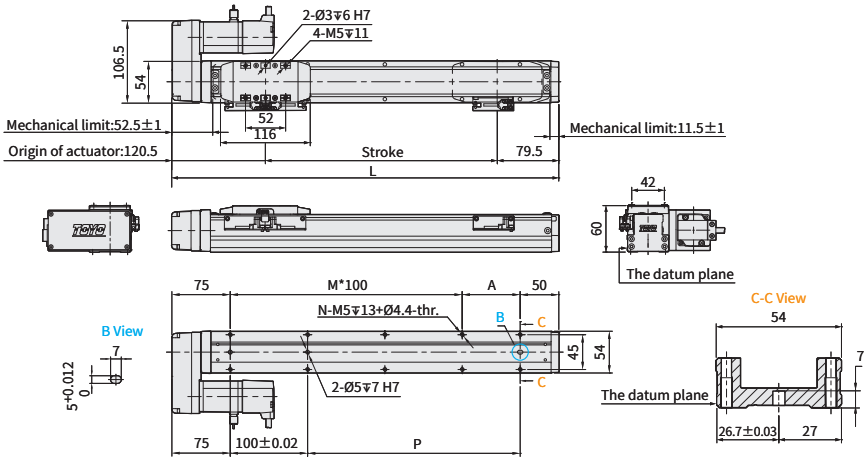

Stroke		50※2	100	150	200	250	300	350	400	450	500	550	600	650	700	750	800	850	900	950	1000	1050
Limit Stroke (±1)		70	120	170	220	270	320	370	420	470	520	570	620	670	720	770	820	870	920	970	1020	1070
L		250	300	350	400	450	500	550	600	650	700	750	800	850	900	950	1000	1050	1100	1150	1200	1250
A		25	75	25	75	25	75	25	75	25	75	25	75	25	75	25	75	25	75	25	75	25
M		1	1	2	2	3	3	4	4	5	5	6	6	7	7	8	8	9	9	10	10	11
N		6	6	8	8	10	10	12	12	14	14	16	16	18	18	20	20	22	22	24	24	26
P		25	75	125	175	225	275	325	375	425	475	525	575	625	675	725	775	825	875	925	975	1025
KG		1. 68	1. 8	2. 03	2. 14	2. 42	2. 53	2. 58	2. 78	2. 89	2. 98	3. 18	3. 31	3. 47	3. 6	3. 74	4. 12	4. 5	4. 88	5. 26	5. 64	6. 02
Linear Speed mm/s	Lead 2	100												90	80	70	60	50	47	40	37	33
	Lead 5	300										292	250	225	200	175	150	125	117	100	92	83
	Lead 10	600										583	500	450	400	350	300	250	233	200	183	167
	Lead 20	1200										1167	1000	900	800	700	600	500	467	400	367	333

※2 When the stroke is 50mm, if fixing the body from the top to the bottom, the fixing hole will be blocked by slider and only can be uses 4 screws to fix;as a result, suggest that fixing actuator body from the bottom to the top.

BL Motor Right Side

2D CAD 3D CAD Download CAD data at www.toyorobot.com

Unit : mm

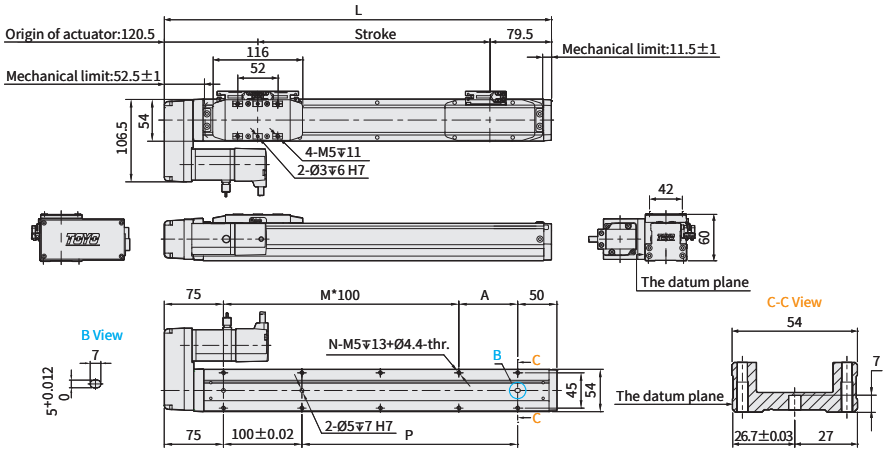

Stroke		50※2	100	150	200	250	300	350	400	450	500	550	600	650	700	750	800	850	900	950	1000	1050
Limit Stroke (±1)		70	120	170	220	270	320	370	420	470	520	570	620	670	720	770	820	870	920	970	1020	1070
L		250	300	350	400	450	500	550	600	650	700	750	800	850	900	950	1000	1050	1100	1150	1200	1250
A		25	75	25	75	25	75	25	75	25	75	25	75	25	75	25	75	25	75	25	75	25
M		1	1	2	2	3	3	4	4	5	5	6	6	7	7	8	8	9	9	10	10	11
N		6	6	8	8	10	10	12	12	14	14	16	16	18	18	20	20	22	22	24	24	26
P		25	75	125	175	225	275	325	375	425	475	525	575	625	675	725	775	825	875	925	975	1025
KG		1. 68	1. 8	2. 03	2. 14	2. 42	2. 53	2. 58	2. 78	2. 89	2. 98	3. 18	3. 31	3. 47	3. 6	3. 74	4. 12	4. 5	4. 88	5. 26	5. 64	6. 02
Linear Speed mm/s	Lead 2	100												90	80	70	60	50	47	40	37	33
	Lead 5	300										292	250	225	200	175	150	125	117	100	92	83
	Lead 10	600										583	500	450	400	350	300	250	233	200	183	167
	Lead 20	1200										1167	1000	900	800	700	600	500	467	400	367	333

※2 When the stroke is 50mm, if fixing the body from the top to the bottom, the fixing hole will be blocked by slider and only can be uses 4 screws to fix;as a result, suggest that fixing actuator body from the bottom to the top.

MSiTEC PRODUCTIVITY THROUGH TECHNOLOGY
Visit msitec.com
Call 866-397-7388
Email info@msitec.com

GTH8

▶ Integrated Linear Bearing ▶ Ball Screw Drive

The picture is just for the reference. Please check the the actual dimensions on the drawing.

Ordering Method

GTH8 - L10 - 100 - BC - X - C4 - 0001

Model

Special Order No.

Ballscrew Accuracy Grade

L	Rolled Ballscrews
C	Ground Ballscrews

*C precision-level ground ball screws are not available in all stroke lengths, please consult the model datasheet.

Stroke

Rolled Ballscrews
50-1250mm(50mm increments)
Ground Ballscrews
50-700mm(50mm increments)

Ball Screw Lead

5	5mm
10	10mm
20	20mm

Motor Position

BC	Motor Exposed
BM	Motor Bottom Side
BL	Motor Left Side
BR	Motor Right Side
-*2	No Motor Position

Motor Flange、Power Output

With Motor Flange & Coupling				
M	Mitsubishi	05	-	B
P	Panasonic	10	-	
Y	Yaskawa	20	200W	
T	Delta	40	-	
X	Others*1			
Without Motor Flange & Coupling				
K	No Motor Flange & Coupling*2			

*1 When choosing non-standard motor X, the motor spec must be provided and confirmed by TOYO for installation before the order is established.

*2 When K is selected, the motor position need no description.

Home Sensor

Outside	
C	Motor Side
D	Opposite Motor Side
No Sensor	
E	No Sensor

*When the stroke is 50mm, the sensor installation has the following restrictions:

1.The home sensor and the limit sensor must be installed on different sides of the body.

2.The sensor trigger device must be installed on both sides of the device.

Limit Sensor

Outside	
3	1 Pc
4	2 Pc
No Sensor	
5	No Sensor

MSiTEC PRODUCTIVITY THROUGH TECHNOLOGY
Visit msitec.com
Call 866-397-7388
Email info@msitec.com

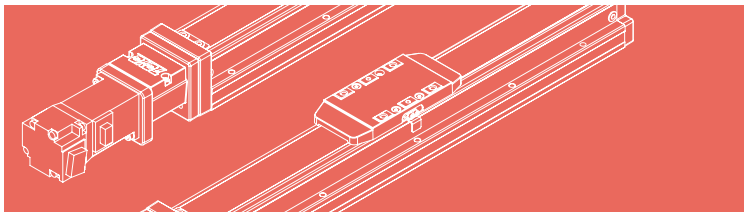

Specification

Item	Ball Screw Spec.	Ballscrew Accuracy Grade Code			L	C
		Ballscrew Accuracy Grade			C7 Rolled Ballscrews	C5 Ground Ballscrews
		Repeatability		mm	±0.005	±0.003
		Stroke (increments)		mm	50-1250mm (50 increments)	50-700mm (50 increments)

Item	Ball screw	Outer dia. & Precision grade		mm	Ø16 & C7		
		Lead		mm	5	10	20
		Maximum Rotating speed		rpm	3600	3600	3600
		Maximum linear speed ※1		mm/s	300	600	1200
		Basic dynamic load rating Ca		N	8042	6300	4152
		Basic static load rating Coa		N	15088	11596	7439
		Load factor			1.2	1.35	1.35
	Linear Guide	Dynamic horizontal	100 Km of travel	kgf	1899		
			1000 Km of travel	kgf	881		
			10000 Km of travel	kgf	409		
		Static horizontal		kg	3490		
	Fixed bearing	Basic dynamic load rating Cr		N	2600		
		Static load rating Cor		N	4750		
	Common Spec	Start torpue		N.cm	10		
		Allowable input torque		N.m	2.2		
		Maximum acceleration		m/s^2	10		
		Friction coefficient			0.03		
		Ambient temperature ※2		°C	0~+40		

※1 Estimated max speed and max payload when using a standard 100W servo motor.
(Confirm max speed and payload at the same time.)

※2 Customized temperature:-20°C~ 80°C. special grease requirement need to follow customization process.

Static Loading Moment

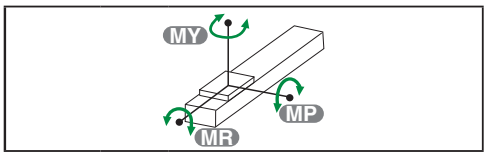

MY	N.m	318
MP	N.m	318
MR	N.m	626

Dynamic Loading Moment

Travel	km	100	1000	10000
MY	N.m	121.6	56.5	26.2
MP	N.m	121.6	56.5	26.2
MR	N.m	201.9	93.7	43.5

Parts list

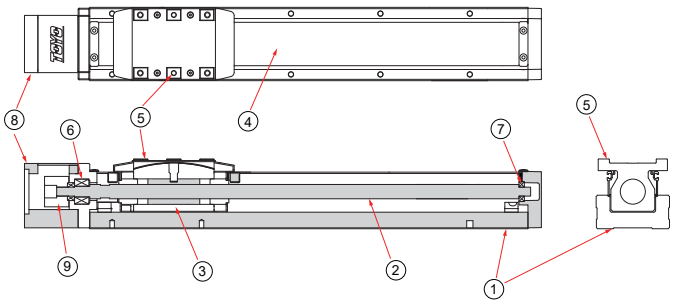

No.	Part Description	Material
1	Housing	AL6463
2	Ball Screw	S45C
3	Ball Screw Nut	S45C
4	Steel Band	SUS430
5	Carriage	SNCM21H
6	Ball Bearing Dual Arrangement	SUJ2
7	Ball Bearing	SUJ2
8	Fixed Support Block-Inline Motor Mounting Bracket	AL6061
9	Coupling- Clamping	AL6061

MSITEC PRODUCTIVITY THROUGH TECHNOLOGY
Visit msitec.com
Call 866-397-7388
Email info@msitec.com

GTH8

▶ Integrated Linear Bearing ▶ Ball Screw Drive

BC Motor Exposed

2D CAD 3D CAD Download CAD data at www.toyorobot.com

Unit : mm

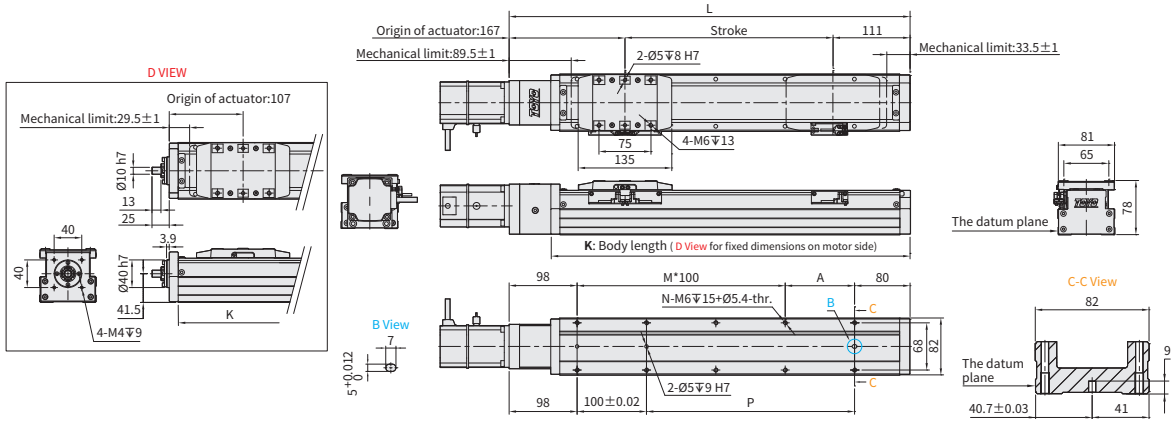

Stroke		50※2	100	150	200	250	300	350	400	450	500	550	600	650	700	750	800	850	900	950	1000	1050	1100	1150	1200	1250
Limit Stroke (±1)		70	120	170	220	270	320	370	420	470	520	570	620	670	720	770	820	870	920	970	1020	1070	1120	1170	1220	1270
L		328	378	428	478	528	578	628	678	728	778	828	878	928	978	1028	1078	1128	1178	1228	1278	1328	1378	1428	1478	1528
A		50	100	50	100	50	100	50	100	50	100	50	100	50	100	50	100	50	100	50	100	50	100	50	100	50
M		1	1	2	2	3	3	4	4	5	5	6	6	7	7	8	8	9	9	10	10	11	11	12	12	13
N		6	6	8	8	10	10	12	12	14	14	16	16	18	18	20	20	22	22	24	24	26	26	27	27	28
P		50	100	150	200	250	300	350	400	450	500	550	600	650	700	750	800	850	900	950	1000	1050	1100	1150	1200	1250
KG※1		3. 91	4. 29	4. 7	5	5. 35	5. 68	6	6. 35	6. 64	6. 97	7. 41	7. 71	8. 12	8. 41	8. 65	8. 96	9. 37	9. 62	10. 01	10. 28	10. 7	11. 12	11. 54	11. 96	12. 38
K		268	318	368	418	468	518	568	618	668	718	768	818	868	918	968	1018	1068	1118	1168	1218	1268	1318	1368	1418	1468
Linear Speed mm/s	Lead 5	300												292	250	225	200	175	150	142	133	117	108	100	92	83
	Lead 10	600												583	500	450	400	350	300	283	267	233	217	200	183	167
	Lead 20	1200												1167	1000	900	800	700	600	567	533	467	433	400	367	333

※1 KG refers to the weight with motor related accessories (excluding motor), not corresponding to K Type.
※2 When the stroke is 50mm, if fixing the body from the top to the bottom, the fixing hole will be blocked by slider and only can be uses 4 screws to fix;as a result, suggest that fixing actuator body from the bottom to the top.

BM Motor Bottom Side

2D CAD 3D CAD Download CAD data at www.toyorobot.com

Unit : mm

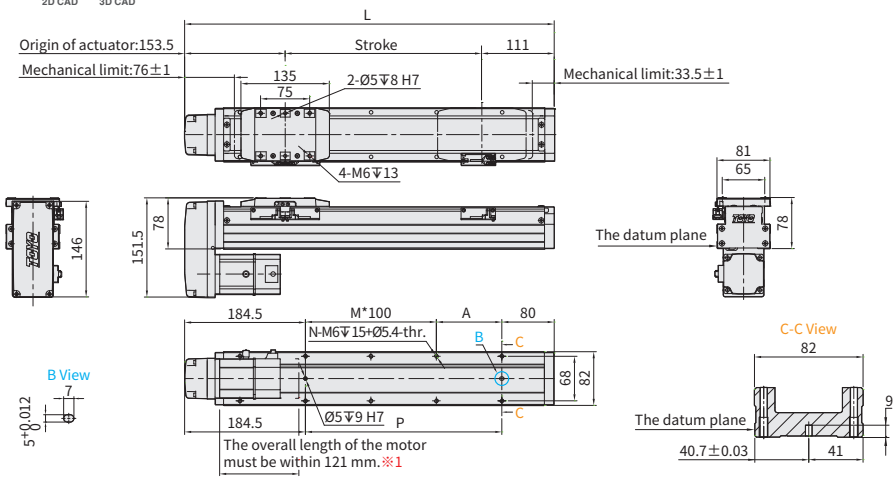

Stroke		50※2	100	150	200	250	300	350	400	450	500	550	600	650	700	750	800	850	900	950	1000	1050	1100	1150	1200	1250
Limit Stroke (±1)		70	120	170	220	270	320	370	420	470	520	570	620	670	720	770	820	870	920	970	1020	1070	1120	1170	1220	1270
L		314. 5	364. 5	414. 5	464. 5	514. 5	564. 5	614. 5	664. 5	714. 5	764. 5	814. 5	864. 5	914. 5	964. 5	1014. 5	1064. 5	1114. 5	1164. 5	1214. 5	1264. 5	1314. 5	1364. 5	1414. 5	1464. 5	1514. 5
A		50	100	50	100	50	100	50	100	50	100	50	100	50	100	50	100	50	100	50	100	50	100	50	100	50
M		0	0	1	1	2	2	3	3	4	4	5	5	6	6	7	7	8	8	9	9	10	10	11	11	12
N		4	4	6	6	8	8	10	10	12	12	14	14	16	16	18	18	20	20	22	22	24	24	26	26	27
P		50	100	150	200	250	300	350	400	450	500	550	600	650	700	750	800	850	900	950	1000	1050	1100	1150	1200	1250
KG		3. 95	4. 33	4. 74	5. 09	5. 39	5. 72	6. 04	6. 39	6. 68	7. 01	7. 45	7. 75	8. 16	8. 45	8. 69	9	9. 41	9. 66	10. 08	10. 32	10. 74	11. 16	11. 58	12	12. 42
Linear Speed mm/s	Lead 5	300												292	250	225	200	175	150	142	133	117	108	100	92	83
	Lead 10	600												583	500	450	400	350	300	283	267	233	217	200	183	167
	Lead 20	1200												1167	1000	900	800	700	600	567	533	467	433	400	367	333

※1 When motor with brake assembled on lower side, or the total length over than spec limit, it may not use standard pinhole. Please contact our sales department if you need more information & requirement.
※2 When the stroke is 50mm, if fixing the body from the top to the bottom, the fixing hole will be blocked by slider and only can be uses 4 screws to fix;as a result, suggest that fixing actuator body from the bottom to the top.

MSITEC PRODUCTIVITY THROUGH TECHNOLOGY
Visit msitec.com
Call 866-397-7388
Email info@msitec.com

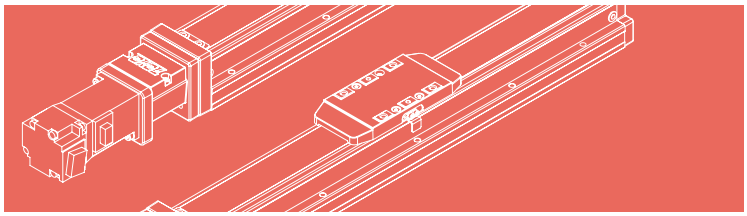

BR Motor Left Side

2D CAD 3D CAD Download CAD data at www.toyorobot.com

Unit : mm

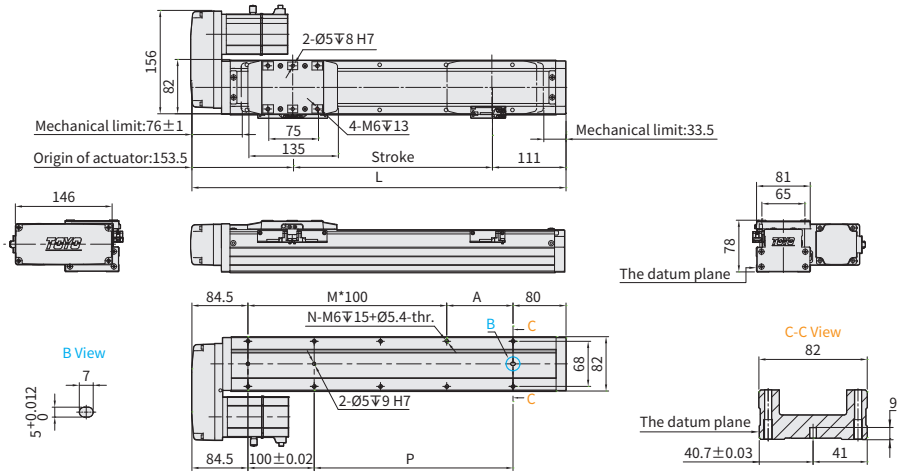

Stroke		50※2	100	150	200	250	300	350	400	450	500	550	600	650	700	750	800	850	900	950	1000	1050	1100	1150	1200	1250
Limit Stroke (±1)		70	120	170	220	270	320	370	420	470	520	570	620	670	720	770	820	870	920	970	1020	1070	1120	1170	1220	1270
L		314.5	364.5	414.5	464.5	514.5	564.5	614.5	664.5	714.5	764.5	814.5	864.5	914.5	964.5	1014.5	1064.5	1114.5	1164.5	1214.5	1264.5	1314.5	1364.5	1414.5	1464.5	1514.5
A		50	100	50	100	50	100	50	100	50	100	50	100	50	100	50	100	50	100	50	100	50	100	50	100	50
M		1	1	2	2	3	3	4	4	5	5	6	6	7	7	8	8	9	9	10	10	11	11	12	12	13
N		6	6	8	8	10	10	12	12	14	14	16	16	18	18	20	20	22	22	24	24	26	26	27	27	28
P		50	100	150	200	250	300	350	400	450	500	550	600	650	700	750	800	850	900	950	1000	1050	1100	1150	1200	1250
KG		3.95	4.33	4.74	5.09	5.39	5.72	6.04	6.39	6.68	7.01	7.45	7.75	8.16	8.45	8.69	9	9.41	9.66	10.08	10.32	10.74	11.16	11.58	12	12.42
Linear Speed mm/s	Lead 5	300												292	250	225	200	175	150	142	133	117	108	100	92	83
	Lead 10	600												583	500	450	400	350	300	283	267	233	217	200	183	167
	Lead 20	1200												1167	1000	900	800	700	600	567	533	467	433	400	367	333

※2 When the stroke is 50mm, if fixing the body from the top to the bottom, the fixing hole will be blocked by slider and only can be uses 4 screws to fix;as a result, suggest that fixing actuator body from the bottom to the top.

BL Motor Right Side

2D CAD 3D CAD Download CAD data at www.toyorobot.com

Unit : mm

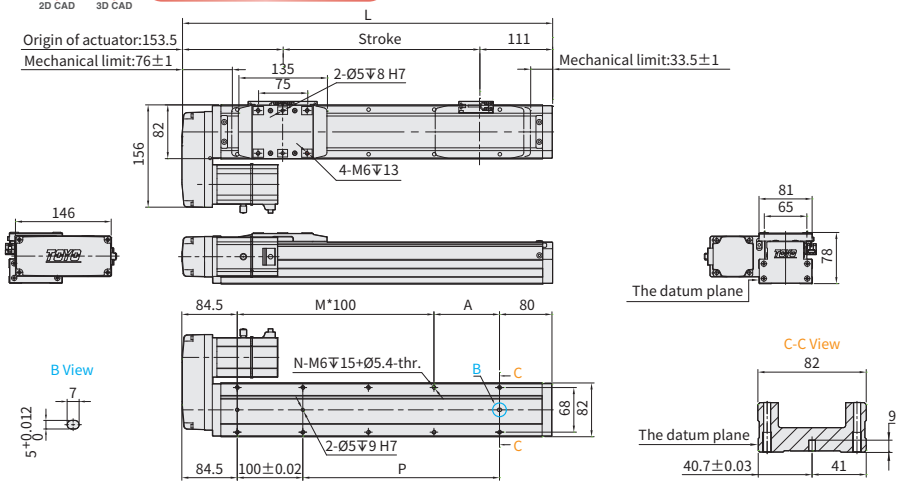

Stroke		50※2	100	150	200	250	300	350	400	450	500	550	600	650	700	750	800	850	900	950	1000	1050	1100	1150	1200	1250
Limit Stroke (±1)		70	120	170	220	270	320	370	420	470	520	570	620	670	720	770	820	870	920	970	1020	1070	1120	1170	1220	1270
L		314.5	364.5	414.5	464.5	514.5	564.5	614.5	664.5	714.5	764.5	814.5	864.5	914.5	964.5	1014.5	1064.5	1114.5	1164.5	1214.5	1264.5	1314.5	1364.5	1414.5	1464.5	1514.5
A		50	100	50	100	50	100	50	100	50	100	50	100	50	100	50	100	50	100	50	100	50	100	50	100	50
M		1	1	2	2	3	3	4	4	5	5	6	6	7	7	8	8	9	9	10	10	11	11	12	12	13
N		6	6	8	8	10	10	12	12	14	14	16	16	18	18	20	20	22	22	24	24	26	26	27	27	28
P		50	100	150	200	250	300	350	400	450	500	550	600	650	700	750	800	850	900	950	1000	1050	1100	1150	1200	1250
KG		3.95	4.33	4.74	5.09	5.39	5.72	6.04	6.39	6.68	7.01	7.45	7.75	8.16	8.45	8.69	9	9.41	9.66	10.08	10.32	10.74	11.16	11.58	12	12.42
Linear Speed mm/s	Lead 5	300												292	250	225	200	175	150	142	133	117	108	100	92	83
	Lead 10	600												583	500	450	400	350	300	283	267	233	217	200	183	167
	Lead 20	1200												1167	1000	900	800	700	600	567	533	467	433	400	367	333

※2 When the stroke is 50mm, if fixing the body from the top to the bottom, the fixing hole will be blocked by slider and only can be uses 4 screws to fix;as a result, suggest that fixing actuator body from the bottom to the top.

MSITEC PRODUCTIVITY THROUGH TECHNOLOGY
Visit msitec.com
Call 866-397-7388
Email info@msitec.com

GTH8

▶ Integrated Linear Bearing ▶ Ball Screw Drive

The picture is just for the reference. Please check the the actual dimensions on the drawing.

Ordering Method

GTH8 - L10 - 100 - BC - X - C4 - 0001

Model | **Special Order No.**

Ballscrew Accuracy Grade

L	Rolled Ballscrews
C	Ground Ballscrews

*C precision-level ground ball screws are not available in all stroke lengths, please consult the model datasheet.

Stroke

Rolled Ballscrews
50-1250mm(50mm increments)
Ground Ballscrews
50-700mm(50mm increments)

Ball Screw Lead

5	5mm
10	10mm
20	20mm

Motor Position

BC	Motor Exposed
BM	Motor Bottom Side
BL	Motor Left Side
BR	Motor Right Side
-*2	No Motor Position

Motor Flange、Power Output

With Motor Flange & Coupling				
M	Mitsubishi	05	-	B
P	Panasonic	10	-	
Y	Yaskawa	20	-	
T	Delta	40	400W	
X	Others*1			
Without Motor Flange & Coupling				
K	No Motor Flange & Coupling*2			

*1 When choosing non-standard motor X, the motor spec must be provided and confirmed by TOYO for installation before the order is established.

*2 When K is selected, the motor position need no description.

Home Sensor

Outside	
C	Motor Side
D	Opposite Motor Side
No Sensor	
E	No Sensor

*When the stroke is 50mm, the sensor installation has the following restrictions:

1.The home sensor and the limit sensor must be installed on different sides of the body.

2.The sensor trigger device must be installed on both sides of the device.

Limit Sensor

Outside	
3	1 Pc
4	2 Pc
No Sensor	
5	No Sensor

MSiTEC PRODUCTIVITY THROUGH TECHNOLOGY
Visit msitec.com
Call 866-397-7388
Email info@msitec.com

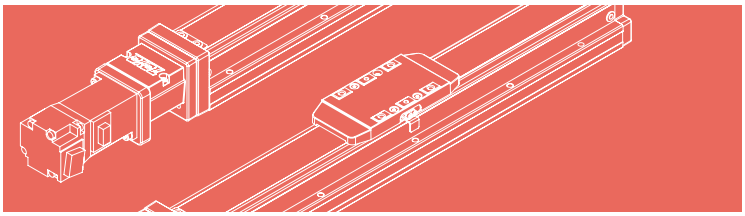

Specification

Item	Ball Screw Spec.	Ballscrew Accuracy Grade Code		L	C
		Ballscrew Accuracy Grade		C7 Rolled Ballscrews	C5 Ground Ballscrews
		Repeatability	mm	±0.005	±0.003
		Stroke Pitch	mm	50-1250mm / 50 Pitch	50-700mm / 50 Pitch

Item	Ball screw	Outer dia. & Precision grade	mm	Ø16 & C7		
		Lead	mm	5	10	20
		Maximum Rotating speed	rpm	3600	3600	3600
		Maximum linear speed ※1	mm/s	300	600	1200
		Basic dynamic load rating Ca	N	8042	6300	4152
		Basic static load rating Coa	N	15088	11596	7439
		Load factor		1.2	1.35	1.35
	Linear Guide	Dynamic horizontal: 100 Km of travel	kgf	1899		
		Dynamic horizontal: 1000 Km of travel	kgf	881		
		Dynamic horizontal: 10000 Km of travel	kgf	409		
		Static horizontal	kg	3490		
	Fixed bearing	Basic dynamic load rating Cr	N	2600		
		Static load rating Cor	N	4750		
	Common Spec	Start torpue	N.cm	10		
		Allowable input torque	N.m	2.2		
		Maximum acceleration	m/s^2	10		
		Friction coefficient		0.03		
		Ambient temperature	°C	0~+40		

※1 Estimated max speed and max payload when using a standard 100W servo motor.
(Confirm max speed and payload at the same time.)

Static Loading Moment

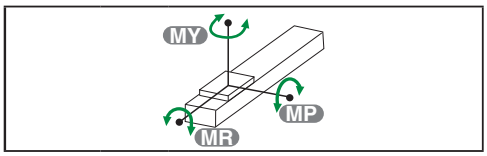

MY	N.m	318
MP	N.m	318
MR	N.m	626

Dynamic Loading Moment

Travel	km	100	1000	10000
MY	N.m	121.6	56.5	26.2
MP	N.m	121.6	56.5	26.2
MR	N.m	201.9	93.7	43.5

Parts list

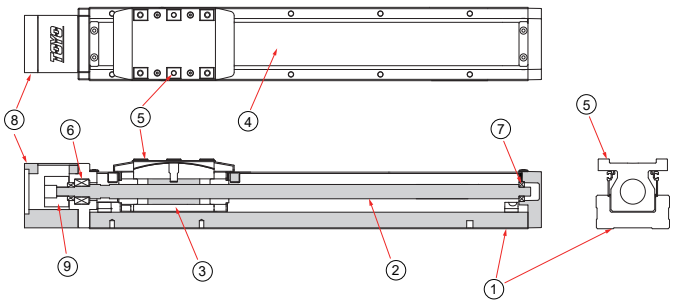

No.	Part Description	Material
1	Housing	AL6463
2	Ball Screw	S45C
3	Ball Screw Nut	S45C
4	Steel Band	SUS430
5	Carriage	SNCM21H
6	Ball Bearing Dual Arrangement	SUJ2
7	Ball Bearing	SUJ2
8	Fixed Support Block-Inline Motor Mounting Bracket	AL6061
9	Coupling- Clamping	AL6061

MSITEC PRODUCTIVITY THROUGH TECHNOLOGY
Visit msitec.com
Call 866-397-7388
Email info@msitec.com

GTH8

▶ Integrated Linear Bearing ▶ Ball Screw Drive

BC Motor Exposed

2D CAD 3D CAD Download CAD data at www.toyorobot.com

Unit : mm

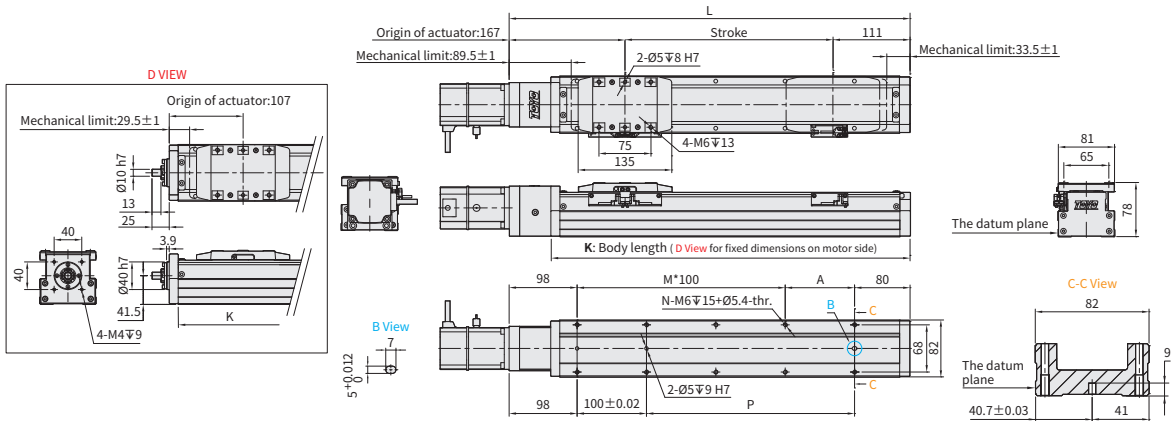

Stroke		50※2	100	150	200	250	300	350	400	450	500	550	600	650	700	750	800	850	900	950	1000	1050	1100	1150	1200	1250
Limit Stroke (±1)		70	120	170	220	270	320	370	420	470	520	570	620	670	720	770	820	870	920	970	1020	1070	1120	1170	1220	1270
L		328	378	428	478	528	578	628	678	728	778	828	878	928	978	1028	1078	1128	1178	1228	1278	1328	1378	1428	1478	1528
A		50	100	50	100	50	100	50	100	50	100	50	100	50	100	50	100	50	100	50	100	50	100	50	100	50
M		1	1	2	2	3	3	4	4	5	5	6	6	7	7	8	8	9	9	10	10	11	11	12	12	13
N		6	6	8	8	10	10	12	12	14	14	16	16	18	18	20	20	22	22	24	24	26	26	27	27	28
P		50	100	150	200	250	300	350	400	450	500	550	600	650	700	750	800	850	900	950	1000	1050	1100	1150	1200	1250
KG※1		3. 91	4. 29	4. 7	5	5. 35	5. 68	6	6. 35	6. 64	6. 97	7. 41	7. 71	8. 12	8. 41	8. 65	8. 96	9. 37	9. 62	10. 01	10. 28	10. 7	11. 12	11. 54	11. 96	12. 38
K		268	318	368	418	468	518	568	618	668	718	768	818	868	918	968	1018	1068	1118	1168	1218	1268	1318	1368	1418	1468
Linear Speed mm/s	Lead 5	300												292	250	225	200	175	150	142	133	117	108	100	92	83
	Lead 10	600												583	500	450	400	350	300	283	267	233	217	200	183	167
	Lead 20	1200												1167	1000	900	800	700	600	567	533	467	433	400	367	333

※1 KG refers to the weight with motor related accessories (excluding motor), not corresponding to K Type.
※2 When the stroke is 50mm, if fixing the body from the top to the bottom, the fixing hole will be blocked by slider and only can be uses 4 screws to fix;as a result, suggest that fixing actuator body from the bottom to the top.

BM Motor Bottom Side

2D CAD 3D CAD Download CAD data at www.toyorobot.com

Unit : mm

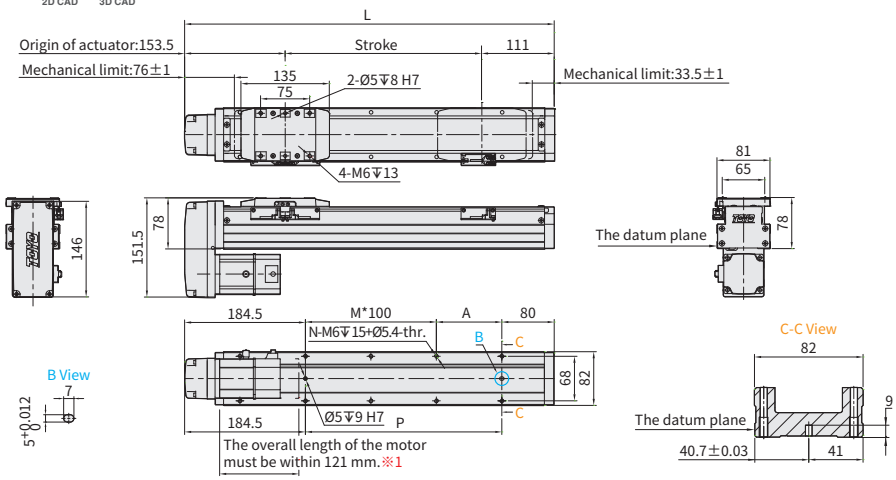

Stroke		50※2	100	150	200	250	300	350	400	450	500	550	600	650	700	750	800	850	900	950	1000	1050	1100	1150	1200	1250
Limit Stroke (±1)		70	120	170	220	270	320	370	420	470	520	570	620	670	720	770	820	870	920	970	1020	1070	1120	1170	1220	1270
L		314. 5	364. 5	414. 5	464. 5	514. 5	564. 5	614. 5	664. 5	714. 5	764. 5	814. 5	864. 5	914. 5	964. 5	1014. 5	1064. 5	1114. 5	1164. 5	1214. 5	1264. 5	1314. 5	1364. 5	1414. 5	1464. 5	1514. 5
A		50	100	50	100	50	100	50	100	50	100	50	100	50	100	50	100	50	100	50	100	50	100	50	100	50
M		0	0	1	1	2	2	3	3	4	4	5	5	6	6	7	7	8	8	9	9	10	10	11	11	12
N		4	4	6	6	8	8	10	10	12	12	14	14	16	16	18	18	20	20	22	22	24	24	26	26	27
P		50	100	150	200	250	300	350	400	450	500	550	600	650	700	750	800	850	900	950	1000	1050	1100	1150	1200	1250
KG		3. 95	4. 33	4. 74	5. 09	5. 39	5. 72	6. 04	6. 39	6. 68	7. 01	7. 45	7. 75	8. 16	8. 45	8. 69	9	9. 41	9. 66	10. 08	10. 32	10. 74	11. 16	11. 58	12	12. 42
Linear Speed mm/s	Lead 5	300												292	250	225	200	175	150	142	133	117	108	100	92	83
	Lead 10	600												583	500	450	400	350	300	283	267	233	217	200	183	167
	Lead 20	1200												1167	1000	900	800	700	600	567	533	467	433	400	367	333

※1 When motor with brake assembled on lower side, or the total length over than spec limit, it may not use standard pinhole. Please contact our sales department if you need more information & requirement.
※2 When the stroke is 50mm, if fixing the body from the top to the bottom, the fixing hole will be blocked by slider and only can be uses 4 screws to fix;as a result, suggest that fixing actuator body from the bottom to the top.

MSITEC PRODUCTIVITY THROUGH TECHNOLOGY
Visit msitec.com
Call 866-397-7388
Email info@msitec.com

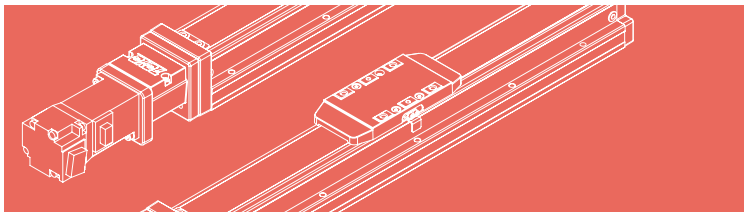

BR Motor Left Side

2D CAD 3D CAD Download CAD data at www.toyorobot.com

Unit : mm

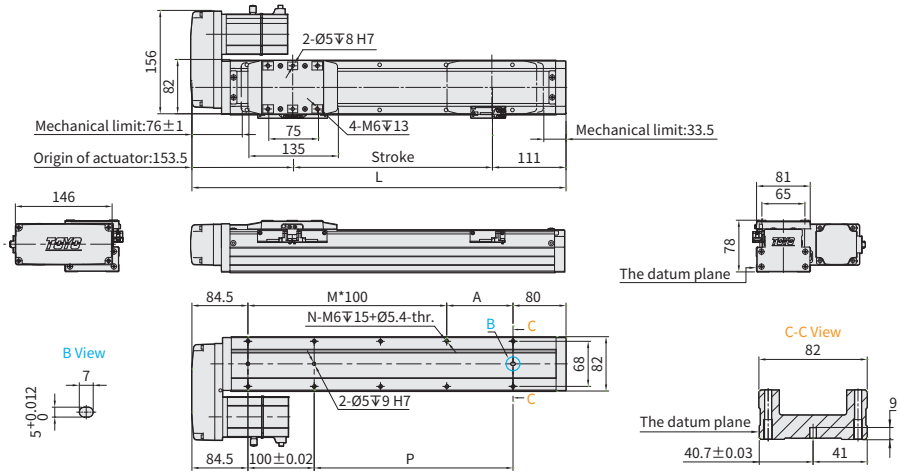

Stroke		50※2	100	150	200	250	300	350	400	450	500	550	600	650	700	750	800	850	900	950	1000	1050	1100	1150	1200	1250
Limit Stroke (±1)		70	120	170	220	270	320	370	420	470	520	570	620	670	720	770	820	870	920	970	1020	1070	1120	1170	1220	1270
L		314.5	364.5	414.5	464.5	514.5	564.5	614.5	664.5	714.5	764.5	814.5	864.5	914.5	964.5	1014.5	1064.5	1114.5	1164.5	1214.5	1264.5	1314.5	1364.5	1414.5	1464.5	1514.5
A		50	100	50	100	50	100	50	100	50	100	50	100	50	100	50	100	50	100	50	100	50	100	50	100	50
M		1	1	2	2	3	3	4	4	5	5	6	6	7	7	8	8	9	9	10	10	11	11	12	12	13
N		6	6	8	8	10	10	12	12	14	14	16	16	18	18	20	20	22	22	24	24	26	26	27	27	28
P		50	100	150	200	250	300	350	400	450	500	550	600	650	700	750	800	850	900	950	1000	1050	1100	1150	1200	1250
KG		3.95	4.33	4.74	5.09	5.39	5.72	6.04	6.39	6.68	7.01	7.45	7.75	8.16	8.45	8.69	9	9.41	9.66	10.08	10.32	10.74	11.16	11.58	12	12.42
Linear Speed mm/s	Lead 5	300												292	250	225	200	175	150	142	133	117	108	100	92	83
	Lead 10	600												583	500	450	400	350	300	283	267	233	217	200	183	167
	Lead 20	1200												1167	1000	900	800	700	600	567	533	467	433	400	367	333

※2 When the stroke is 50mm, if fixing the body from the top to the bottom, the fixing hole will be blocked by slider and only can be uses 4 screws to fix;as a result, suggest that fixing actuator body from the bottom to the top.

BL Motor Right Side

2D CAD 3D CAD Download CAD data at www.toyorobot.com

Unit : mm

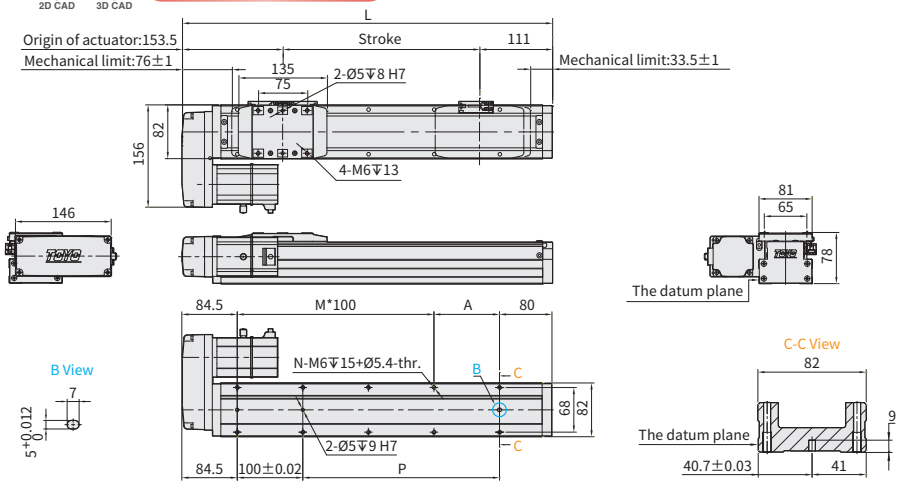

Stroke		50※2	100	150	200	250	300	350	400	450	500	550	600	650	700	750	800	850	900	950	1000	1050	1100	1150	1200	1250
Limit Stroke (±1)		70	120	170	220	270	320	370	420	470	520	570	620	670	720	770	820	870	920	970	1020	1070	1120	1170	1220	1270
L		314.5	364.5	414.5	464.5	514.5	564.5	614.5	664.5	714.5	764.5	814.5	864.5	914.5	964.5	1014.5	1064.5	1114.5	1164.5	1214.5	1264.5	1314.5	1364.5	1414.5	1464.5	1514.5
A		50	100	50	100	50	100	50	100	50	100	50	100	50	100	50	100	50	100	50	100	50	100	50	100	50
M		1	1	2	2	3	3	4	4	5	5	6	6	7	7	8	8	9	9	10	10	11	11	12	12	13
N		6	6	8	8	10	10	12	12	14	14	16	16	18	18	20	20	22	22	24	24	26	26	27	27	28
P		50	100	150	200	250	300	350	400	450	500	550	600	650	700	750	800	850	900	950	1000	1050	1100	1150	1200	1250
KG		3.95	4.33	4.74	5.09	5.39	5.72	6.04	6.39	6.68	7.01	7.45	7.75	8.16	8.45	8.69	9	9.41	9.66	10.08	10.32	10.74	11.16	11.58	12	12.42
Linear Speed mm/s	Lead 5	300												292	250	225	200	175	150	142	133	117	108	100	92	83
	Lead 10	600												583	500	450	400	350	300	283	267	233	217	200	183	167
	Lead 20	1200												1167	1000	900	800	700	600	567	533	467	433	400	367	333

※2 When the stroke is 50mm, if fixing the body from the top to the bottom, the fixing hole will be blocked by slider and only can be uses 4 screws to fix;as a result, suggest that fixing actuator body from the bottom to the top.

MSITEC PRODUCTIVITY THROUGH TECHNOLOGY
Visit msitec.com
Call 866-397-7388
Email info@msitec.com

GTH12

▶ Integrated Linear Bearing ▶ Ball Screw Drive

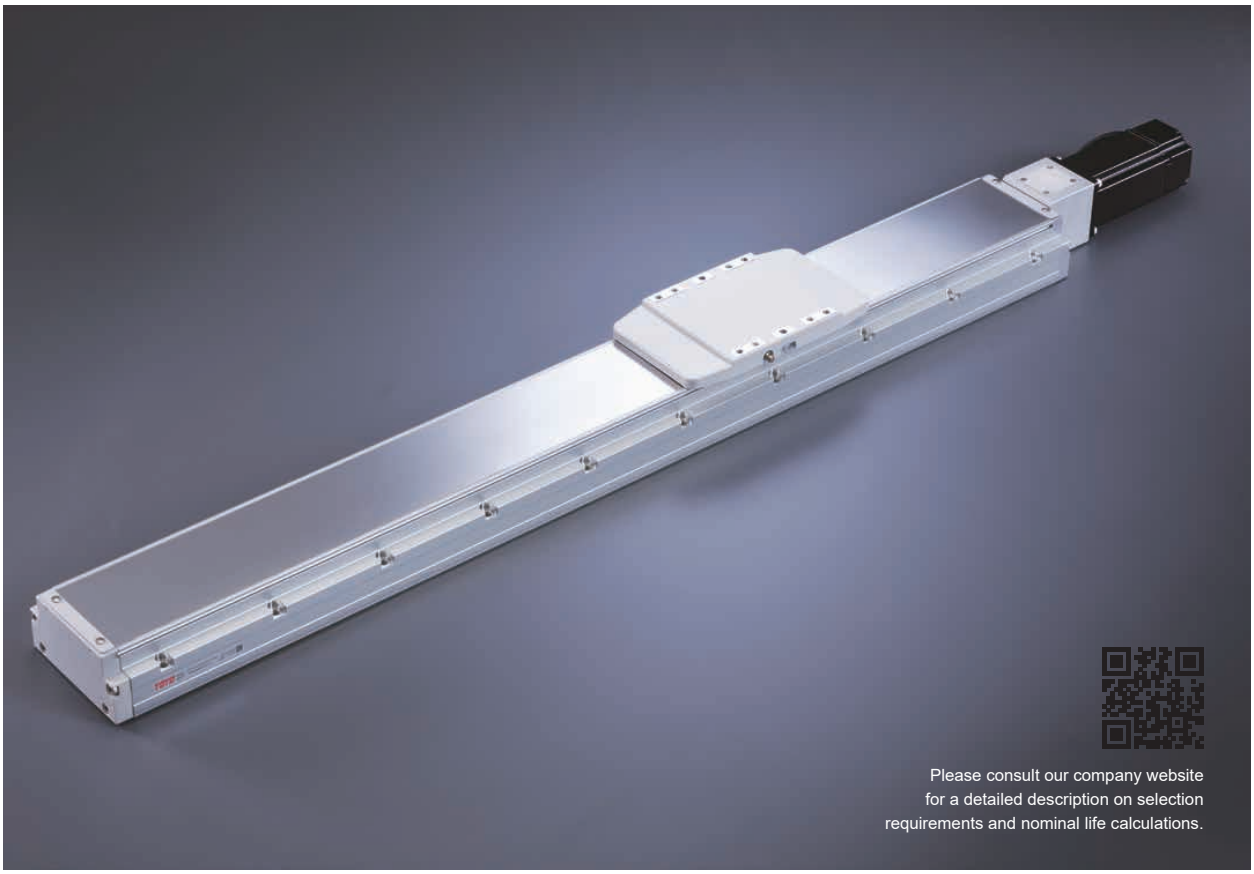

The picture is just for the reference. Please check the the actual dimensions on the drawing.

Ordering Method

GTH12- L5 - 100 - BC - X - C4 - 0001

Model

Special Order No.

Ballscrew Accuracy Grade

L	Rolled Ballscrews
C	Ground Ballscrews

*C precision-level ground ball screws are not available in all stroke lengths, please consult the model datasheet.

Stroke

Rolled Ballscrews
50-1250mm(50mm increments)
Ground Ballscrews
50-700mm(50mm increments)

Ball Screw Lead

5	5mm
10	10mm
20	20mm
32	32mm

Motor Position

BC	Motor Exposed
BM	Motor Bottom Side
BL	Motor Left Side
BR	Motor Right Side
-*2	No Motor Position

Motor Flange、Power Output

With Motor Flange & Coupling				
M	Mitsubishi	05	-	B
P	Panasonic	10	-	
Y	Yaskawa	20	-	
T	Delta	40	400W	
X	Others*1			
Without Motor Flange & Coupling				
K	No Motor Flange & Coupling*2			

*1 When choosing non-standard motor X, the motor spec must be provided and confirmed by TOYO for installation before the order is established.

*2 When K is selected, the motor position need no description.

Home Sensor

Outside	
C	Motor Side
D	Opposite Motor Side
No Sensor	
E	No Sensor

*When the stroke is 50mm, the sensor installation has the following restrictions:

1.The home sensor and the limit sensor must be installed on different sides of the body.

2.The sensor trigger device must be installed on both sides of the device.

Limit Sensor

Outside	
3	1 Pc
4	2 Pc
No Sensor	
5	No Sensor

MSiTEC PRODUCTIVITY THROUGH TECHNOLOGY
Visit msitec.com
Call 866-397-7388
Email info@msitec.com

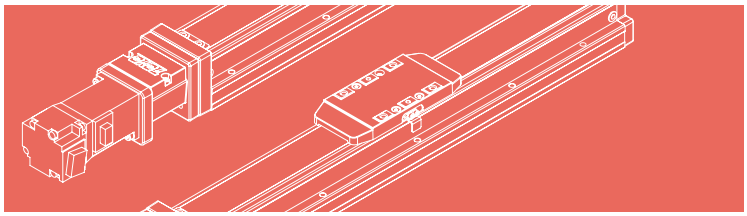

Specification

Item	Ball Screw Spec.	Ballscrew Accuracy Grade Code			L		C
		Ballscrew Accuracy Grade			C7 Rolled Ballscrews		C5 Ground Ballscrews
		Repeatability		mm	±0.005		±0.003
		Stroke Pitch		mm	50-1250mm / 50 Pitch		50-700mm / 50 Pitch

Item	Ball screw	Outer dia. & Precision grade		mm	Ø16 & C7			
		Lead		mm	5	10	20	32
		Maximum Rotating speed		rpm	3600	3600	3600	3600
		Maximum linear speed ※1		mm/s	300	600	1200	1920
		Basic dynamic load rating Ca		N	11570	6300	4152	7326
		Basic static load rating Coa		N	23030	11596	7439	14157
					1.2	1.35	1.35	1.75
	Linear Guide	Dynamic horizontal	100 Km of travel	kgf	5639			
			1000 Km of travel	kgf	2618			
			10000 Km of travel	kgf	1215			
		Static horizontal		kg	9696			
	Fixed bearing	Basic dynamic load rating Cr		N	2600			
		Static load rating Cor		N	4750			
	Common Spec	Start torpue		N.cm	10			
		Allowable input torque		N.m	3.1			
		Maximum acceleration		m/s^2	10			
		Friction coefficient			0.03			
		Ambient temperature ※2		°C	0~+40			

※1 Estimated max speed and max payload when using a standard 100W servo motor.
(Confirm max speed and payload at the same time.)

※2 Customized temperature:-20°C~ 80°C. special grease requirement need to follow customization process.

Static Loading Moment

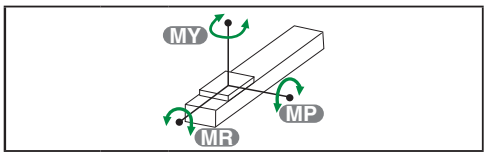

MY	N.m	606
MP	N.m	606
MR	N.m	1168

Dynamic Loading Moment

Travel	km	100	1000	10000
MY	N.m	602.1	279.5	129.7
MP	N.m	602.1	29.5	129.7
MR	N.m	1037.0	481.3	233.4

Parts list

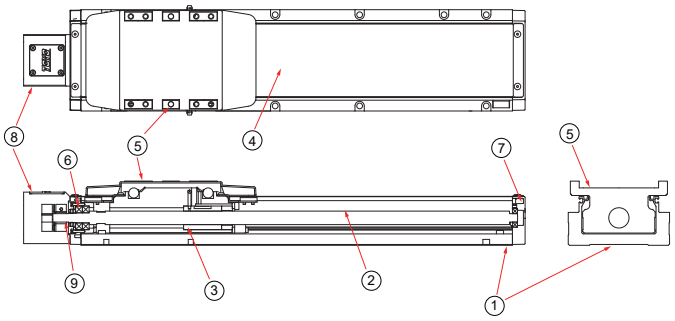

No.	Part Description	Material
1	Housing	AL6463
2	Ball Screw	S45C
3	Ball Screw Nut	S45C
4	Steel Band	SUS430
5	Carriage	SNCM21H
6	Ball Bearing Dual Arrangement	SUJ2
7	Ball Bearing	SUJ2
8	Fixed Support Block-Inline Motor Mounting Bracket	AL6061
9	Coupling- Clamping	AL6061

MSITEC PRODUCTIVITY THROUGH TECHNOLOGY
Visit msitec.com
Call 866-397-7388
Email info@msitec.com

GTH12

▶ Integrated Linear Bearing ▶ Ball Screw Drive

BC Motor Exposed

2D CAD 3D CAD Download CAD data at www.toyorobot.com

Unit : mm

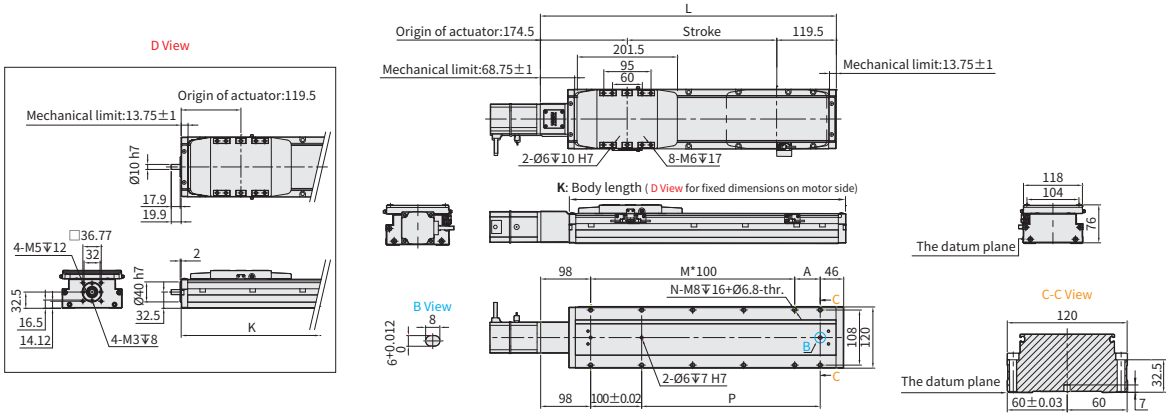

Stroke		50※2	100	150	200	250	300	350	400	450	500	550	600	650	700	750	800	850	900	950	1000	1050	1100	1150	1200	1250
Limit Stroke (±1)		58.5	108.5	158.5	208.5	258.5	308.5	358.5	408.5	458.5	508.5	558.5	608.5	658.5	708.5	758.5	808.5	858.5	908.5	958.5	1008.5	1058.5	1108.5	1158.5	1208.5	1258.5
L		344	394	444	494	544	594	644	694	744	794	844	894	944	994	1044	1094	1144	1194	1244	1294	1344	1394	1444	1494	1544
A		100	50	100	50	100	50	100	50	100	50	100	50	100	50	100	50	100	50	100	50	100	50	100	50	100
M		1	2	2	3	3	4	4	5	5	6	6	7	7	8	8	9	9	10	10	11	11	12	12	13	13
N		6	8	8	10	10	12	12	14	14	16	16	18	18	20	20	22	22	24	24	26	26	28	28	30	30
P		100	150	200	250	300	350	400	450	500	550	600	650	700	750	800	850	900	950	1000	1050	1100	1150	1200	1250	1300
KG※1		5.05	5.4	5.75	6.1	6.45	6.8	7.15	7.5	7.85	8.2	8.55	8.9	9.25	9.6	9.95	10.3	10.65	11	11.35	11.7	12.05	12.4	12.75	13.1	13.45
K		289	339	389	439	489	539	589	639	689	739	789	839	889	939	989	1039	1089	1139	1189	1239	1289	1339	1389	1439	1489
Linear Speed mm/s	Lead 5	300												250				225	200	175	167	158	142	133	125	117
	Lead 10	600												500				450	400	350	333	317	283	267	250	233
	Lead 20	1200												1000				900	800	700	667	633	567	533	500	467
	Lead 32	1920												1600				1440	1280	1120	1067	1013	907	853	800	747

※1 KG refers to the weight with motor related accessories (excluding motor), not corresponding to K Type.
※2 When the stroke is 50mm, if fixing the body from the top to the bottom, the fixing hole will be blocked by slider and only can be uses 4 screws to fix;as a result, suggest that fixing actuator body from the bottom to the top.

BM Motor Bottom Side

2D CAD 3D CAD Download CAD data at www.toyorobot.com

Unit : mm

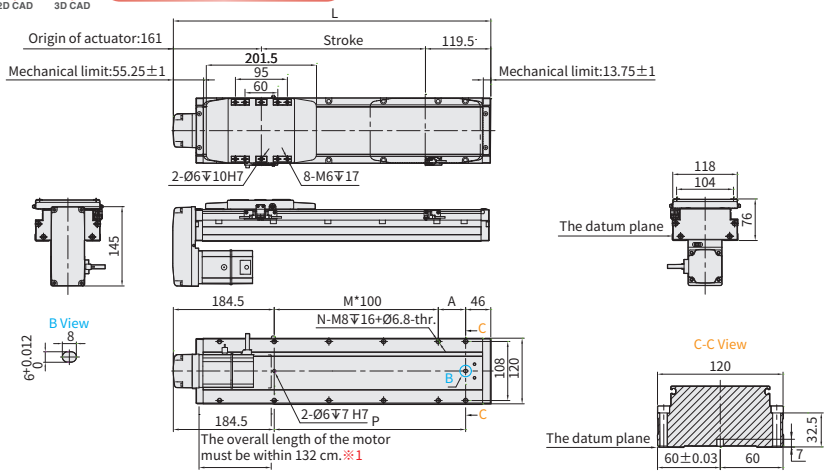

Stroke		50※2	100	150	200	250	300	350	400	450	500	550	600	650	700	750	800	850	900	950	1000	1050	1100	1150	1200	1250
Limit Stroke (±1)		58.5	108.5	158.5	208.5	258.5	308.5	358.5	408.5	458.5	508.5	558.5	608.5	658.5	708.5	758.5	808.5	858.5	908.5	958.5	1008.5	1058.5	1108.5	1158.5	1208.5	1258.5
L		330.5	380.5	430.5	480.5	530.5	580.5	630.5	680.5	730.5	780.5	830.5	880.5	930.5	980.5	1030.5	1080.5	1130.5	1180.5	1230.5	1280.5	1330.5	1380.5	1430.5	1480.5	1530.5
A		100	50	100	50	100	50	100	50	100	50	100	50	100	50	100	50	100	50	100	50	100	50	100	50	100
M		0	1	1	2	2	3	3	4	4	5	5	6	6	7	7	8	8	9	9	10	10	11	11	12	12
N		4	6	6	8	8	10	10	12	12	14	14	16	16	18	18	20	20	22	22	24	24	26	26	28	28
P		100	150	200	250	300	350	400	450	500	550	600	650	700	750	800	850	900	950	1000	1050	1100	1150	1200	1250	1300
KG		5.21	5.56	5.91	6.26	6.61	6.96	7.31	7.66	8.01	8.36	8.71	9.06	9.41	9.76	10.11	10.46	10.81	11.16	11.51	11.86	12.21	12.56	12.91	13.26	13.61
Linear Speed mm/s	Lead 5	300												250				225	200	175	167	158	142	133	125	117
	Lead 10	600												500				450	400	350	333	317	283	267	250	233
	Lead 20	1200												1000				900	800	700	667	633	567	533	500	467
	Lead 32	1920												1600				1440	1280	1120	1067	1013	907	853	800	747

※1 When motor with brake assembled on lower side, or the total length over than spec limit, it may not use standard pinhole. Please contact our sales department if you need more information & requirement.
※2 When the stroke is 50mm, if fixing the body from the top to the bottom, the fixing hole will be blocked by slider and only can be uses 4 screws to fix;as a result, suggest that fixing actuator body from the bottom to the top.

MSITEC PRODUCTIVITY THROUGH TECHNOLOGY
Visit msitec.com
Call 866-397-7388
Email info@msitec.com

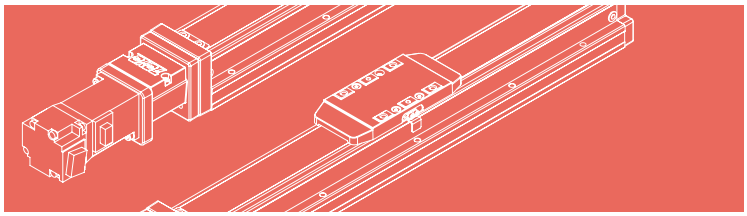

BR Motor Left Side

2D CAD 3D CAD Download CAD data at www.toyorobot.com

Unit : mm

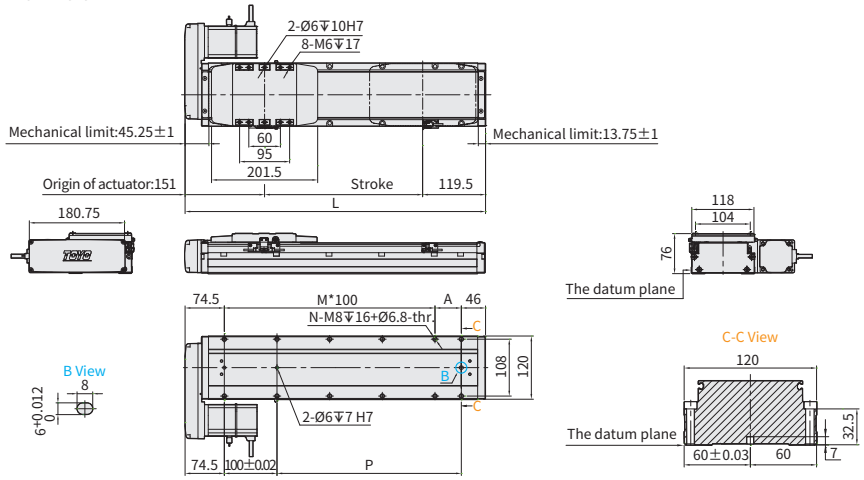

Stroke		50※2	100	150	200	250	300	350	400	450	500	550	600	650	700	750	800	850	900	950	1000	1050	1100	1150	1200	1250
Limit Stroke (±1)		58.5	108.5	158.5	208.5	258.5	308.5	358.5	408.5	458.5	508.5	558.5	608.5	658.5	708.5	758.5	808.5	858.5	908.5	958.5	1008.5	1058.5	1108.5	1158.5	1208.5	1258.5
L		320.5	370.5	420.5	470.5	520.5	570.5	620.5	670.5	720.5	770.5	820.5	870.5	920.5	970.5	1020.5	1070.5	1120.5	1170.5	1220.5	1270.5	1320.5	1370.5	1420.5	1470.5	1520.5
A		100	50	100	50	100	50	100	50	100	50	100	50	100	50	100	50	100	50	100	50	100	50	100	50	100
M		1	2	2	3	3	4	4	5	5	6	6	7	7	8	8	9	9	10	10	11	11	12	12	13	13
N		6	8	8	10	10	12	12	14	14	16	16	18	18	20	20	22	22	24	24	26	26	28	28	30	30
P		100	150	200	250	300	350	400	450	500	550	600	650	700	750	800	850	900	950	1000	1050	1100	1150	1200	1250	1300
KG		5.25	5.6	5.95	6.3	6.65	7	7.35	7.7	8.05	8.4	8.75	9.1	9.45	9.8	10.15	10.85	11.2	11.55	11.9	12.25	12.6	12.56	12.91	13.26	13.61
Linear Speed mm/s	Lead 5	300												250				225	200	175	167	158	142	133	125	117
	Lead 10	600												500				450	400	350	333	317	283	267	250	233
	Lead 20	1200												1000				900	800	700	667	633	567	533	500	467
	Lead 32	1920												1600				1440	1280	1120	1067	1013	907	853	800	747

※2 When the stroke is 50mm, if fixing the body from the top to the bottom, the fixing hole will be blocked by slider and only can be uses 4 screws to fix;as a result, suggest that fixing actuator body from the bottom to the top.

BL Motor Right Side

2D CAD 3D CAD Download CAD data at www.toyorobot.com

Unit : mm

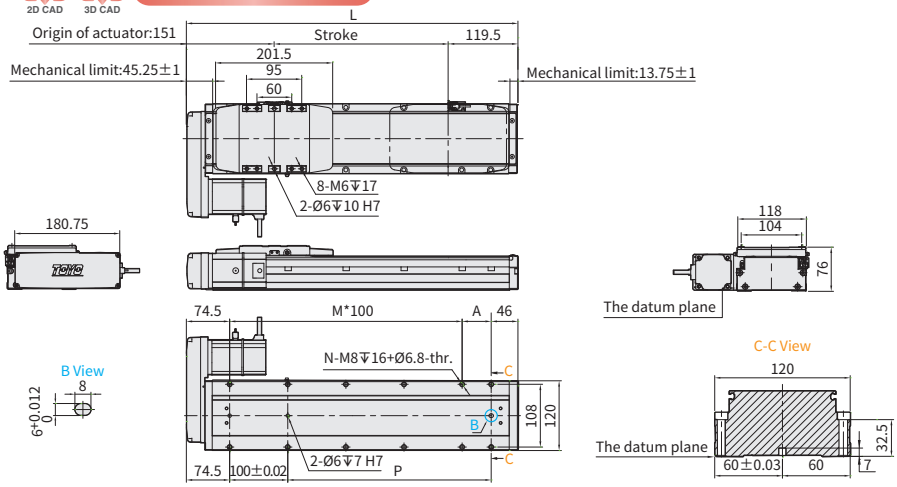

Stroke		50※2	100	150	200	250	300	350	400	450	500	550	600	650	700	750	800	850	900	950	1000	1050	1100	1150	1200	1250
Limit Stroke (±1)		58.5	108.5	158.5	208.5	258.5	308.5	358.5	408.5	458.5	508.5	558.5	608.5	658.5	708.5	758.5	808.5	858.5	908.5	958.5	1008.5	1058.5	1108.5	1158.5	1208.5	1258.5
L		320.5	370.5	420.5	470.5	520.5	570.5	620.5	670.5	720.5	770.5	820.5	870.5	920.5	970.5	1020.5	1070.5	1120.5	1170.5	1220.5	1270.5	1320.5	1370.5	1420.5	1470.5	1520.5
A		100	50	100	50	100	50	100	50	100	50	100	50	100	50	100	50	100	50	100	50	100	50	100	50	100
M		1	2	2	3	3	4	4	5	5	6	6	7	7	8	8	9	9	10	10	11	11	12	12	13	13
N		6	8	8	10	10	12	12	14	14	16	16	18	18	20	20	22	22	24	24	26	26	28	28	30	30
P		100	150	200	250	300	350	400	450	500	550	600	650	700	750	800	850	900	950	1000	1050	1100	1150	1200	1250	1300
KG		5.25	5.6	5.95	6.3	6.65	7	7.35	7.7	8.05	8.4	8.75	9.1	9.45	9.8	10.15	10.85	11.2	11.55	11.9	12.25	12.6	12.56	12.91	13.26	13.61
Linear Speed mm/s	Lead 5	300												250				225	200	175	167	158	142	133	125	117
	Lead 10	600												500				450	400	350	333	317	283	267	250	233
	Lead 20	1200												1000				900	800	700	667	633	567	533	500	467
	Lead 32	1920												1600				1440	1280	1120	1067	1013	907	853	800	747

※2 When the stroke is 50mm, if fixing the body from the top to the bottom, the fixing hole will be blocked by slider and only can be uses 4 screws to fix;as a result, suggest that fixing actuator body from the bottom to the top.

MSITEC PRODUCTIVITY THROUGH TECHNOLOGY
Visit msitec.com
Call 866-397-7388
Email info@msitec.com

GTH5S

▶ Integrated Linear Bearing ▶ Ball Screw Drive

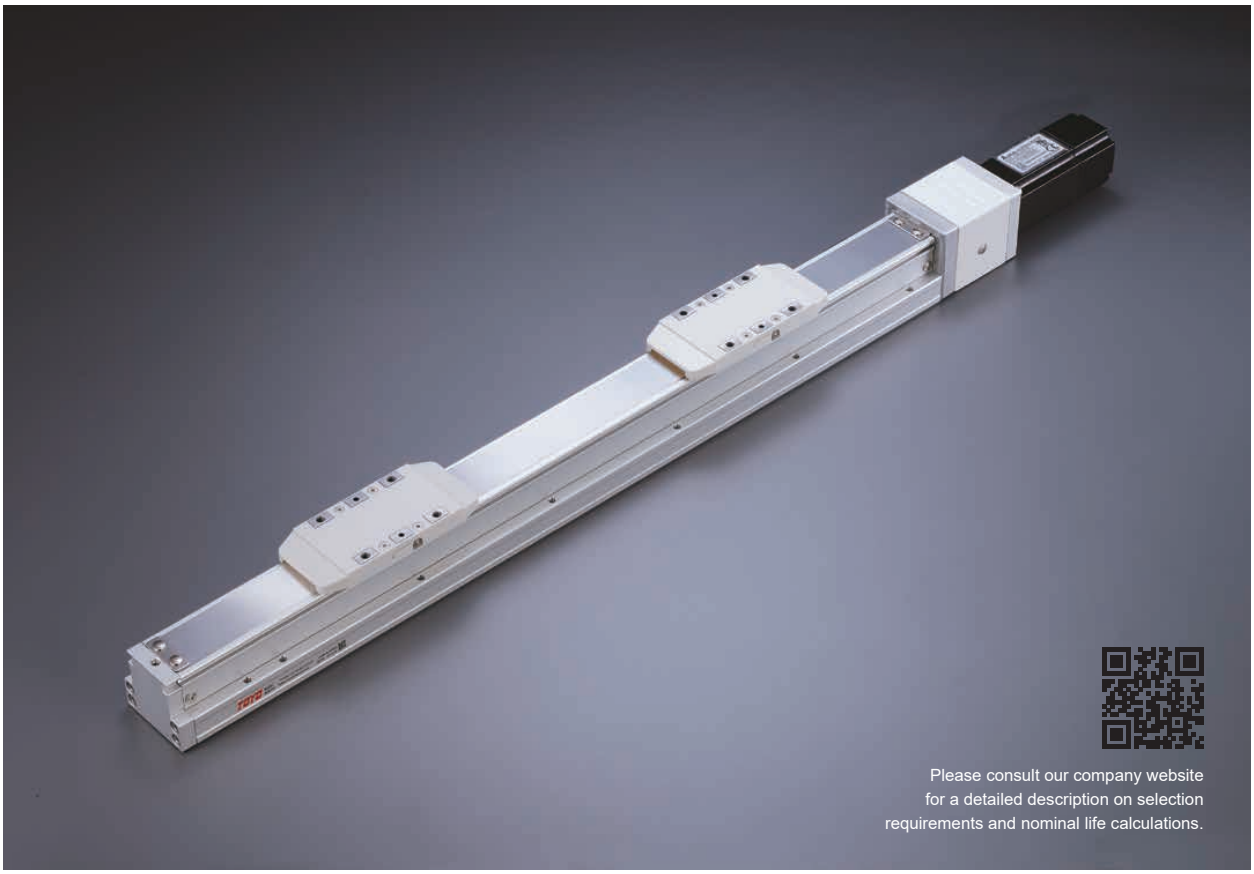

The picture is just for the reference. Please check the the actual dimensions on the drawing.

Ordering Method

GTH5S - L2 - 100 - BC - X - C4 - 0001

Model

Special Order No.

Stroke

25-450mm
25mm increments

Ball Screw Lead

2	2mm

*Dual carriage synchronous movement in reverse direction can only fit at lead of 5mm.

Motor Position

BC	Motor Exposed
BM	Motor Bottom Side
BL	Motor Left Side
BR	Motor Right Side
-*2	No Motor Position

Motor Flange、Power Output

With Motor Flange & Coupling				
M	Mitsubishi	05	-	B
P	Panasonic	10	100W	
Y	Yaskawa	20	-	
T	Delta	40	-	
X	Others*1			
Without Motor Flange & Coupling				
K	No Motor Flange & Coupling*2			

*1 When choosing non-standard motor X, the motor spec must be provided and confirmed by TOYO for installation before the order is established.

*2 When K is selected, the motor position need no description.

Home Sensor

Outside	
C	Motor Side
D	Opposite Motor Side
No Sensor	
E	No Sensor

*When the stroke is 25/50/75mm, the sensor installation has the following restrictions:

1.The home sensor and the limit sensor must be installed on different sides of the body.

2.The sensor trigger device must be installed on both sides of the device.

Limit Sensor

Outside	
3	1 Pc
4	2 Pc
No Sensor	
5	No Sensor

MSITEC PRODUCTIVITY THROUGH TECHNOLOGY
Visit msitec.com
Call 866-397-7388
Email info@msitec.com

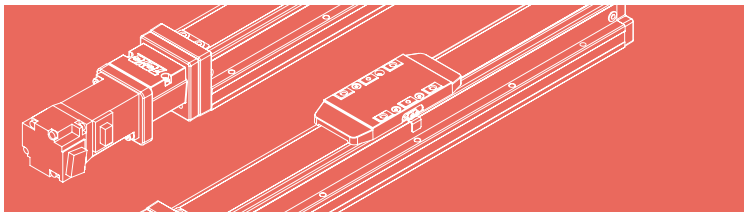

Specification

Item					
	Ball screw	Outer dia. & Precision grade		mm	ø12 & C7
		Lead		mm	2
		Maximum Rotating speed		rpm	3000
		Maximum linear speed ※1		mm/s	100
		Basic dynamic load rating Ca		N	2411
		Basic static load rating Coa		N	5779
		Load factor			1.2
	Linear Guide	Dynamic horizontal	100 Km of travel	kgf	602
			1000 Km of travel	kgf	279
			10000 Km of travel	kgf	130
		Static horizontal		kg	1724
	Fixed bearing	Basic dynamic load rating Cr		N	1730
		Static load rating Cor		N	3800
	Common Spec	Repeatability		mm	±0.005
		Start torpue		N.cm	7
		Allowable input torque		N.m	1.1
		Maximum acceleration		m/s^2	10
		Friction coefficient			0.03
		Stroke (increments)		mm	25-325 (25 increments)
		Ambient temperature ※2		°C	0~+40

※1 Estimated max speed and max payload when using a standard 100W servo motor.
(Confirm max speed and payload at the same time.)

※2 Customized temperature:-20°C~ 80°C. special grease requirement need to follow customization process.

Static Loading Moment

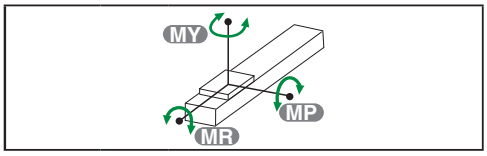

MY	N.m	103
MP	N.m	103
MR	N.m	144

Dynamic Loading Moment

Travel	km	100	1000	10000
MY	N.m	40.8	18.9	8.8
MP	N.m	40.8	18.9	8.8
MR	N.m	58.5	27.2	12.6

Parts list

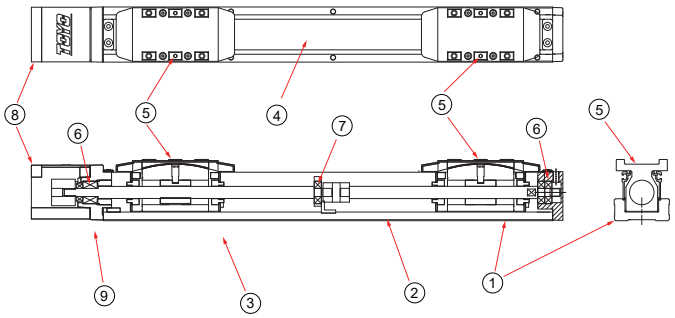

No.	Part Description	Material
1	Housing	AL6463
2	Ball Screw	S45C
3	Ball Screw Nut	S45C
4	Steel Band	SUS430
5	Carriage	SNCM21H
6	Ball Bearing Dual Arrangement	SUJ2
7	Ball Bearing	SUJ2
8	Fixed Support Block-Inline Motor Mounting Bracket	AL6061
9	Coupling- Clamping	AL6061

MSITEC PRODUCTIVITY THROUGH TECHNOLOGY
Visit msitec.com
Call 866-397-7388
Email info@msitec.com

GTH5S

▶ Integrated Linear Bearing ▶ Ball Screw Drive

BC Motor Exposed

2D CAD 3D CAD Download CAD data at www.toyorobot.com

Unit : mm

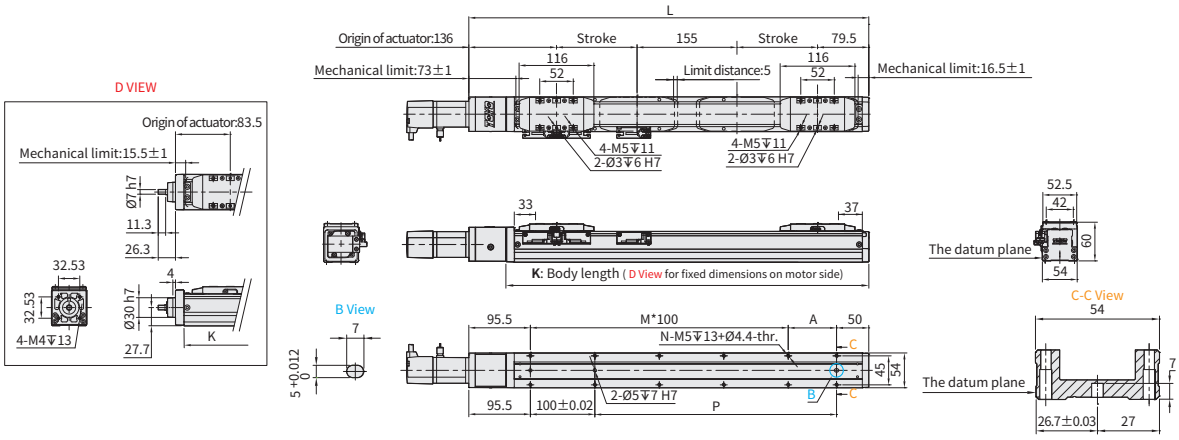

Stroke	25	50※2	75	100	125	150	175	200	225	250	275	300	325	350	375	400	425	450
Limit Stroke (±1)	45	70	95	120	145	170	195	220	245	270	295	320	345	370	395	420	445	470
L	420.5	470.5	520.5	570.5	620.5	670.5	720.5	770.5	820.5	870.5	920.5	970.5	1020.5	1070.5	1120.5	1170.5	1220.5	1270.5
A	75	25	75	25	75	25	75	25	75	25	75	25	75	25	75	25	75	25
M	2	3	3	4	4	5	5	6	6	7	7	8	8	9	9	10	10	11
N	8	10	10	12	12	14	14	16	16	18	18	20	20	22	22	24	24	26
P	175	225	275	325	375	425	475	525	575	625	675	725	775	825	875	925	975	1025
KG※1	2.82	3.01	3.21	3.41	3.6	3.8	4	4.19	4.39	4.59	4.78	4.98	5.18	5.38	5.58	5.78	5.98	6.18
K	363	413	463	513	563	613	663	713	763	813	863	913	963	1013	1063	1113	1163	1213
Linear Speed mm/s — Lead 2	100																	

※1 KG refers to the weight with motor related accessories (excluding motor), not corresponding to K Type.
※2 When the stroke is 50mm, if fixing the body from the top to the bottom, the fixing hole will be blocked by slider and only can be uses 4 screws to fix;as a result, suggest that fixing actuator body from the bottom to the top.

BM Motor Bottom Side

2D CAD 3D CAD Download CAD data at www.toyorobot.com

Unit : mm

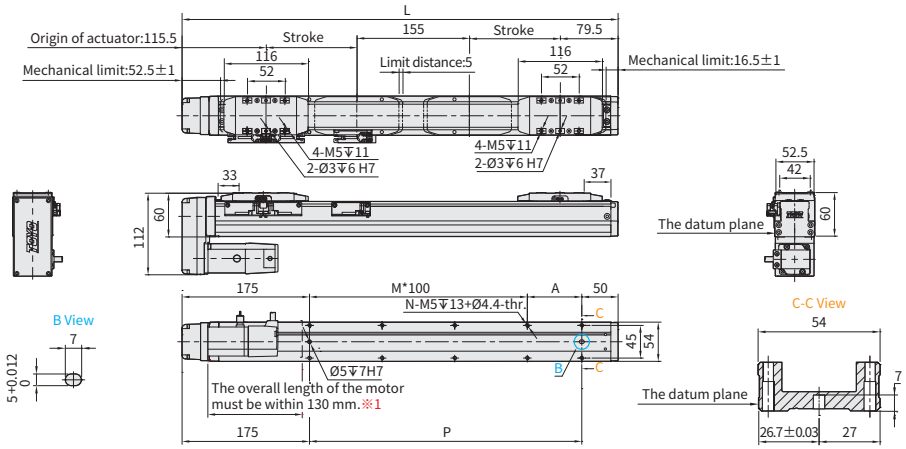

Stroke	25	50※2	75	100	125	150	175	200	225	250	275	300	325	350	375	400	425	450
Limit Stroke (±1)	45	70	95	120	145	170	195	220	245	270	295	320	345	370	395	420	445	470
L	400	450	500	550	600	650	700	750	800	850	900	950	1000	1050	1100	1150	1200	1250
A	75	25	75	25	75	25	75	25	75	25	75	25	75	25	75	25	75	25
M	1	2	2	3	3	4	4	5	5	6	6	7	7	8	8	9	9	10
N	6	8	8	10	10	12	12	14	14	16	16	18	18	20	20	22	22	24
P	175	225	275	325	375	425	475	525	575	625	675	725	775	825	875	925	975	1025
KG	2.99	3.18	3.38	3.58	3.77	3.97	4.17	4.36	4.56	4.76	4.95	5.15	5.35	5.55	5.75	5.95	6.15	6.35
Linear Speed mm/s — Lead 2	100																	

※1 When motor with brake assembled on lower side, or the total length over than spec limit, it may not use standard pinhole. Please contact our sales department if you need more information & requirement.
※2 When the stroke is 50mm, if fixing the body from the top to the bottom, the fixing hole will be blocked by slider and only can be uses 4 screws to fix;as a result, suggest that fixing actuator body from the bottom to the top.

MSITEC PRODUCTIVITY THROUGH TECHNOLOGY
Visit msitec.com
Call 866-397-7388
Email info@msitec.com

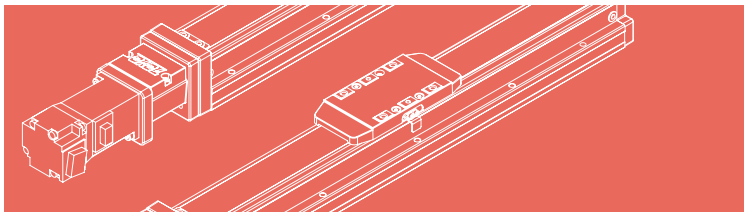

BR Motor Left Side

2D CAD 3D CAD Download CAD data at www.toyorobot.com

Unit : mm

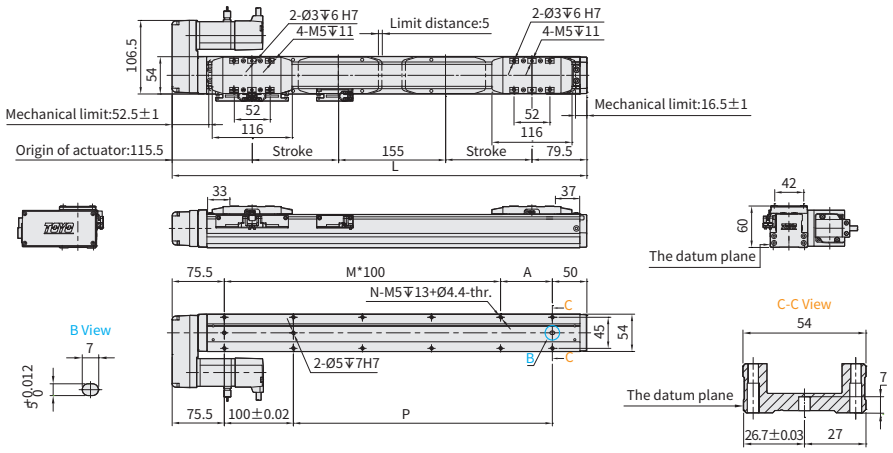

Stroke	25	50※2	75	100	125	150	175	200	225	250	275	300	325	350	375	400	425	450
Limit Stroke (±1)	45	70	95	120	145	170	195	220	245	270	295	320	345	370	395	420	445	470
L	400	450	500	550	600	650	700	750	800	850	900	950	1000	1050	1100	1150	1200	1250
A	75	25	75	25	75	25	75	25	75	25	75	25	75	25	75	25	75	25
M	2	3	3	4	4	5	5	6	6	7	7	8	8	9	9	10	10	11
N	8	10	10	12	12	14	14	16	16	18	18	20	20	22	22	24	24	26
P	175	225	275	325	375	425	475	525	575	625	675	725	775	825	875	925	975	1025
KG	2.99	3.18	3.38	3.58	3.77	3.97	4.17	4.36	4.56	4.76	4.95	5.15	5.35	5.55	5.75	5.95	6.15	6.35
Linear Speed mm/s — Lead 2	100																	

※2 When the stroke is 50mm, if fixing the body from the top to the bottom, the fixing hole will be blocked by slider and only can be uses 4 screws to fix;as a result, suggest that fixing actuator body from the bottom to the top.

BL Motor Right Side

2D CAD 3D CAD Download CAD data at www.toyorobot.com

Unit : mm

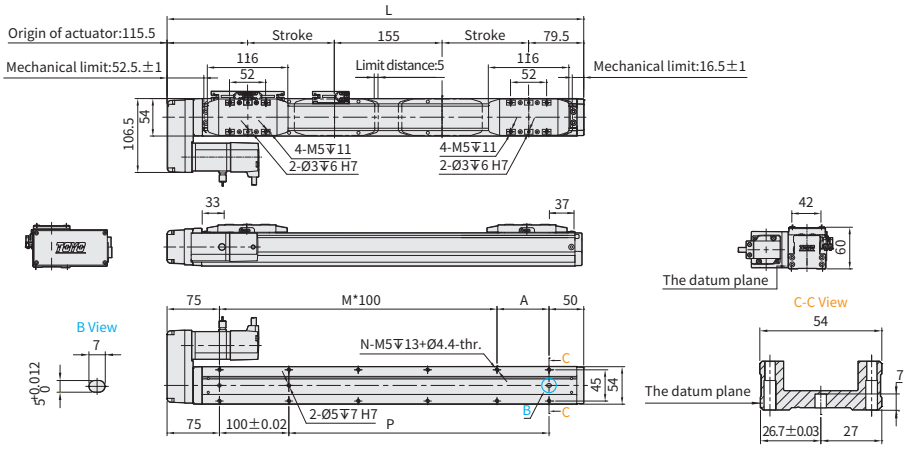

Stroke	25	50※2	75	100	125	150	175	200	225	250	275	300	325	350	375	400	425	450
Limit Stroke (±1)	45	70	95	120	145	170	195	220	245	270	295	320	345	370	395	420	445	470
L	400	450	500	550	600	650	700	750	800	850	900	950	1000	1050	1100	1150	1200	1250
A	75	25	75	25	75	25	75	25	75	25	75	25	75	25	75	25	75	25
M	2	3	3	4	4	5	5	6	6	7	7	8	8	9	9	10	10	11
N	8	10	10	12	12	14	14	16	16	18	18	20	20	22	22	24	24	26
P	175	225	275	325	375	425	475	525	575	625	675	725	775	825	875	925	975	1025
KG	2.99	3.18	3.38	3.58	3.77	3.97	4.17	4.36	4.56	4.76	4.95	5.15	5.35	5.55	5.75	5.95	6.15	6.35
Linear Speed mm/s — Lead 2	100																	

※2 When the stroke is 50mm, if fixing the body from the top to the bottom, the fixing hole will be blocked by slider and only can be uses 4 screws to fix;as a result, suggest that fixing actuator body from the bottom to the top.

GTH8S

▶ Integrated Linear Bearing ▶ Ball Screw Drive

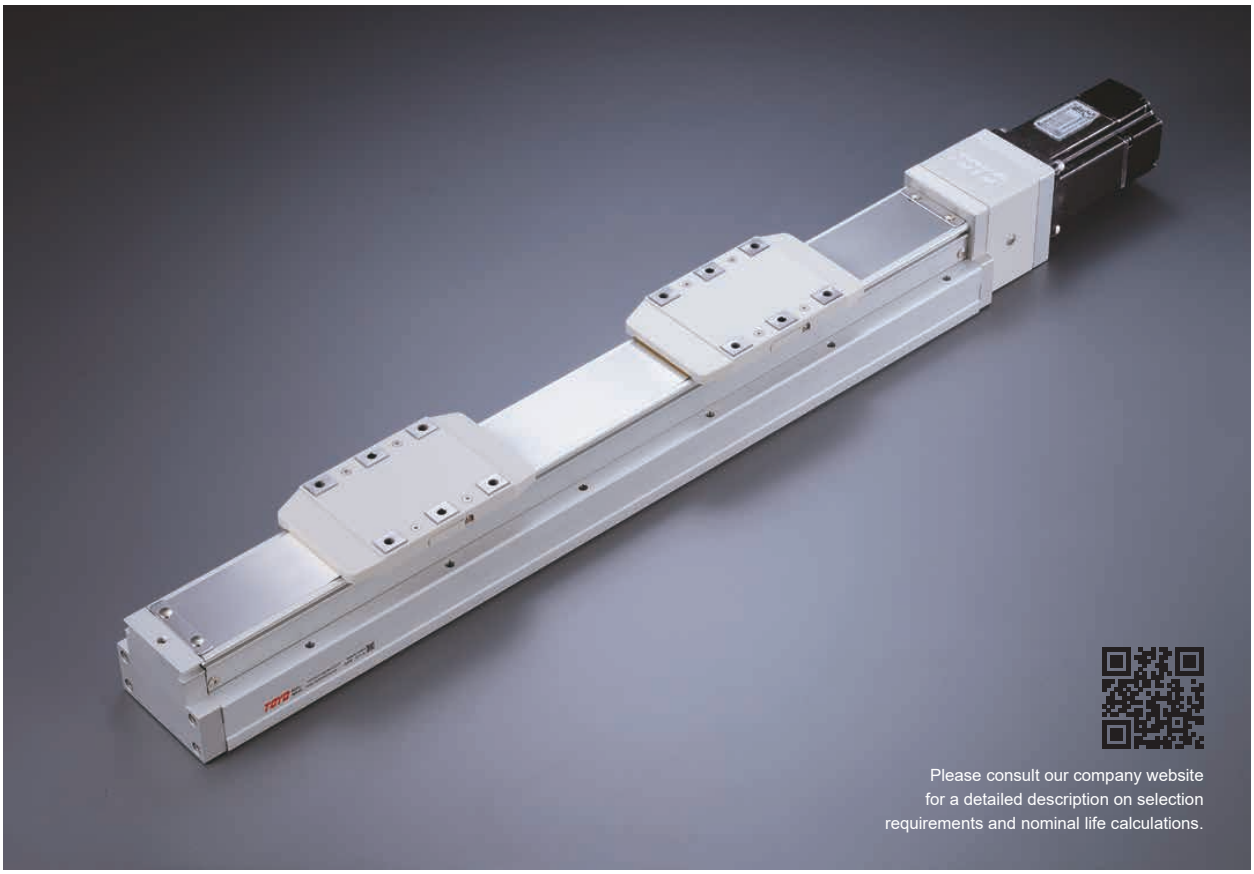

The picture is just for the reference. Please check the the actual dimensions on the drawing.

Ordering Method

GTH8S - L2 - 100 - BC - X - C4 - 0001

Model | **Stroke** | **Special Order No.**

Stroke

25-525mm
25mm increments

Ball Screw Lead

5	5mm

*Dual carriage synchronous movement in reverse direction can only fit at lead of 5mm.

Motor Position

BC	Motor Exposed
BM	Motor Bottom Side
BL	Motor Left Side
BR	Motor Right Side
-*2	No Motor Position

Motor Flange、Power Output

With Motor Flange & Coupling				
M	Mitsubishi	05	-	B
P	Panasonic	10	-	
Y	Yaskawa	20	200W	
T	Delta	40	-	
X	Others*1			
Without Motor Flange & Coupling				
K	No Motor Flange & Coupling*2			

*1 When choosing non-standard motor X, the motor spec must be provided and confirmed by TOYO for installation before the order is established.

*2 When K is selected, the motor position need no description.

Home Sensor

Outside	
C	Motor Side
D	Opposite Motor Side
No Sensor	
E	No Sensor

Limit Sensor

Outside	
3	1 Pc
4	2 Pc
No Sensor	
5	No Sensor

*When the stroke is 25/50/75mm, the sensor installation has the following restrictions:

1.The home sensor and the limit sensor must be installed on different sides of the body.

2.The sensor trigger device must be installed on both sides of the device.

MSITEC PRODUCTIVITY THROUGH TECHNOLOGY
Visit msitec.com
Call 866-397-7388
Email info@msitec.com

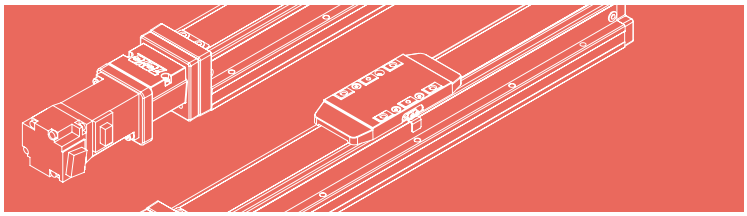

Specification

Item					
	Ball screw	Outer dia. & Precision grade		mm	ø16 & C7
		Lead		mm	5
		Maximum Rotating speed		rpm	3600
		Maximum linear speed ※1		mm/s	300
		Basic dynamic load rating Ca		N	8042
		Basic static load rating Coa		N	15088
		Load factor			1.2
	Linear Guide	Dynamic horizontal	100 Km of travel	kgf	1899
			1000 Km of travel	kgf	881
			10000 Km of travel	kgf	409
		Static horizontal		kg	3490
	Fixed bearing	Basic dynamic load rating Cr		N	2600
		Static load rating Cor		N	4750
	Common Spec	Repeatability		mm	±0.005
		Start torpue		N.cm	10
		Allowable input torque		N.m	2.2
		Maximum acceleration		m/s^2	10
		Friction coefficient			0.03
		Stroke (increments)		mm	25-325 (25 increments)
		Ambient temperature ※2		°C	0~+40

※1 Estimated max speed and max payload when using a standard 100W servo motor.
(Confirm max speed and payload at the same time.)

※2 Customized temperature:-20°C~ 80°C. special grease requirement need to follow customization process.

Static Loading Moment

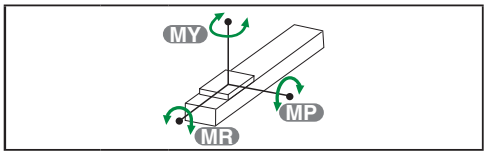

MY	N.m	318
MP	N.m	318
MR	N.m	626

Dynamic Loading Moment

Travel	km	100	1000	10000
MY	N.m	121.6	56.5	26.2
MP	N.m	121.6	56.5	26.2
MR	N.m	201.9	93.7	43.5

Parts list

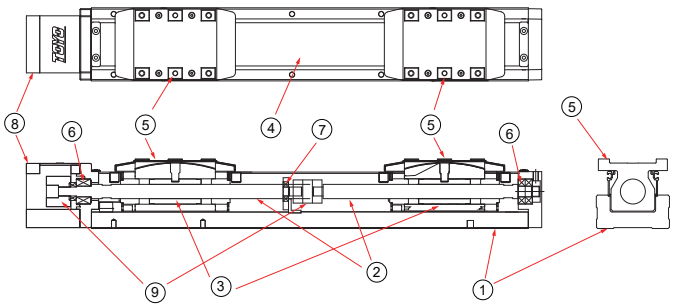

No.	Part Description	Material
1	Housing	AL6463
2	Ball Screw	S45C
3	Ball Screw Nut	S45C
4	Steel Band	SUS430
5	Carriage	SNCM21H
6	Ball Bearing Dual Arrangement	SUJ2
7	Ball Bearing	SUJ2
8	Fixed Support Block-Inline Motor Mounting Bracket	AL6061
9	Coupling- Clamping	AL6061

GTH8S

▶ Integrated Linear Bearing ▶ Ball Screw Drive

BC Motor Exposed

2D CAD 3D CAD Download CAD data at www.toyorobot.com

Unit : mm

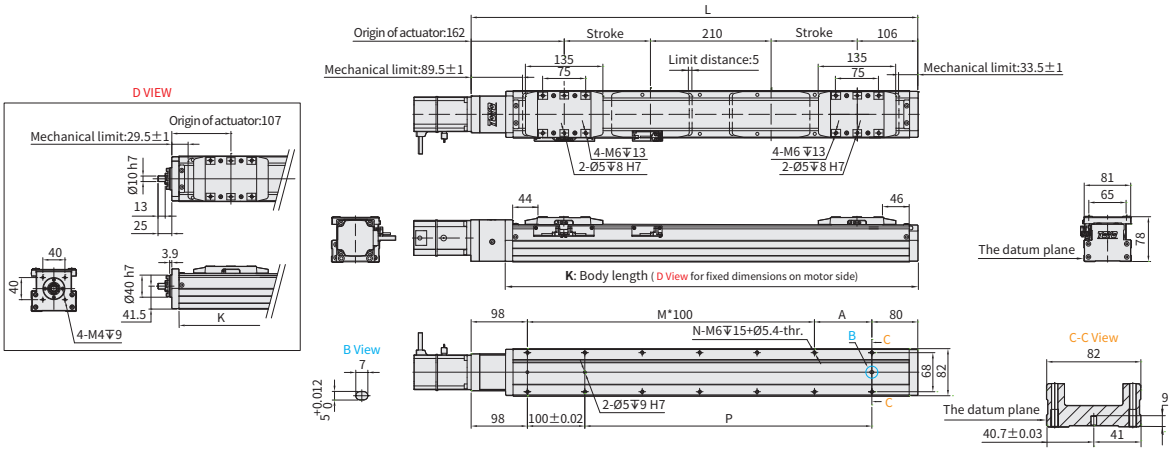

Stroke	25	50※2	75	100	125	150	175	200	225	250	275	300	325	350	375	400	425	450	475	500	525
Limit Stroke (±1)	45	70	95	120	145	170	195	220	245	270	295	320	345	370	395	420	445	450	495	520	545
L	528	578	628	678	728	778	828	878	928	978	1028	1078	1128	1178	1228	1278	1328	1378	1428	1478	1528
A	50	100	50	100	50	100	50	100	50	100	50	100	50	100	50	100	50	100	50	100	50
M	3	3	4	4	5	5	6	6	7	7	8	8	9	9	10	10	11	11	12	12	13
N	10	10	12	12	14	14	16	16	18	18	20	20	22	22	24	24	26	26	28	28	30
P	250	300	350	400	450	500	550	600	650	700	750	800	850	900	950	1000	1050	1100	1150	1200	1250
KG※1	6. 64	7. 00	7. 37	7. 73	8. 10	8. 46	8. 83	9. 19	9. 56	9. 92	10. 29	10. 65	11. 02	11. 38	11. 75	12. 11	12. 48	12. 85	13. 22	13. 59	13. 96
K	468	518	568	618	668	718	768	818	868	918	968	1018	1068	1118	1168	1218	1268	1318	1368	1418	1468
Linear Speed mm/s — Lead 5	300																				

※1 KG refers to the weight with motor related accessories (excluding motor), not corresponding to K Type.
※2 When the stroke is 50mm, if fixing the body from the top to the bottom, the fixing hole will be blocked by slider and only can be uses 4 screws to fix;as a result, suggest that fixing actuator body from the bottom to the top.

BM Motor Bottom Side

2D CAD 3D CAD Download CAD data at www.toyorobot.com

Unit : mm

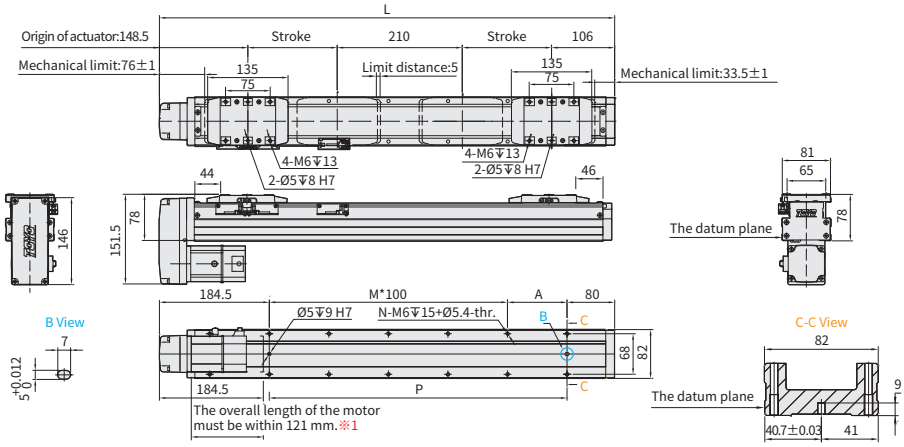

Stroke	25	50※2	75	100	125	150	175	200	225	250	275	300	325	350	375	400	425	450	475	500	525
Limit Stroke (±1)	45	70	95	120	145	170	195	220	245	270	295	320	345	370	395	420	445	450	495	520	545
L	514. 5	564. 5	614. 5	664. 5	714. 5	764. 5	814. 5	864. 5	914. 5	964. 5	1014. 5	1064. 5	1114. 5	1164. 5	1214. 5	1264. 5	1314. 5	1364. 5	1414. 5	1464. 5	1514. 5
A	50	100	50	100	50	100	50	100	50	100	50	100	50	100	50	100	50	100	50	100	50
M	2	2	3	3	4	4	5	5	6	6	7	7	8	8	9	9	10	10	11	11	12
N	8	8	10	10	12	12	14	14	16	16	18	18	20	20	22	22	24	24	26	26	28
P	250	300	350	400	450	500	550	600	650	700	750	800	850	900	950	1000	1050	1100	1150	1200	1250
KG	7. 16	7. 68	8. 2	8. 72	9. 24	9. 76	10. 28	10. 8	11. 32	11. 84	12. 36	12. 88	13. 4	13. 92	14. 44	14. 96	15. 48	16	16. 52	17. 04	17. 56
Linear Speed mm/s — Lead 5	300																				

※1 When motor with brake assembled on lower side, or the total length over than spec limit, it may not use standard pinhole. Please contact our sales department if you need more information & requirement.
※2 When the stroke is 50mm, if fixing the body from the top to the bottom, the fixing hole will be blocked by slider and only can be uses 4 screws to fix;as a result, suggest that fixing actuator body from the bottom to the top.

MSITEC PRODUCTIVITY THROUGH TECHNOLOGY
Visit msitec.com
Call 866-397-7388
Email info@msitec.com

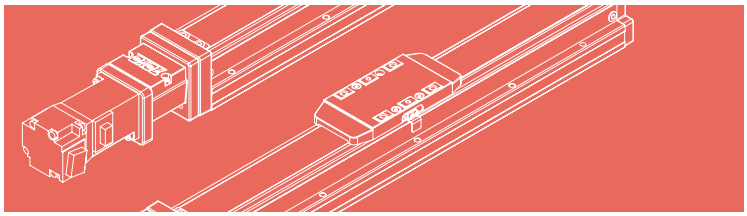

BR Motor Left Side

2D CAD 3D CAD Download CAD data at www.toyorobot.com

Unit : mm

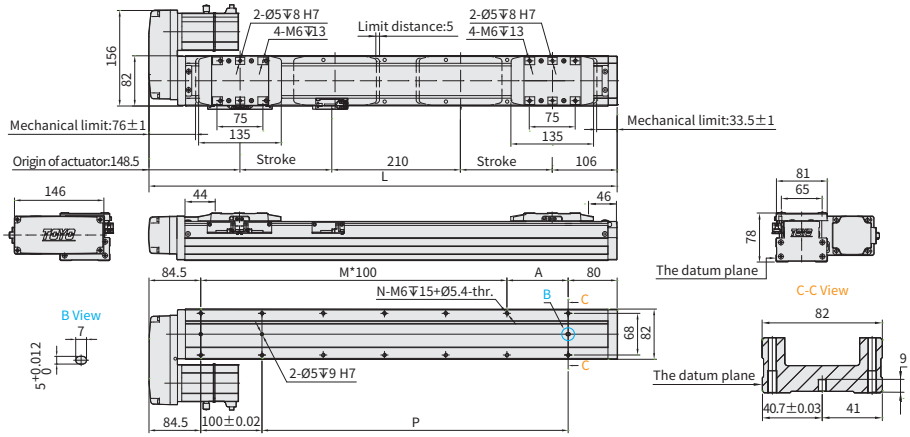

Stroke	25	50※2	75	100	125	150	175	200	225	250	275	300	325	350	375	400	425	450	475	500	525
Limit Stroke (±1)	45	70	95	120	145	170	195	220	245	270	295	320	345	370	395	420	445	450	495	520	545
L	514.5	564.5	614.5	664.5	714.5	764.5	814.5	864.5	914.5	964.5	1014.5	1064.5	1114.5	1164.5	1214.5	1264.5	1314.5	1364.5	1414.5	1464.5	1514.5
A	50	100	50	100	50	100	50	100	50	100	50	100	50	100	50	100	50	100	50	100	50
M	3	3	4	4	5	5	6	6	7	7	8	8	9	9	10	10	11	11	12	12	13
N	10	10	12	12	14	14	16	16	18	18	20	20	22	22	24	24	26	26	28	28	30
P	250	300	350	400	450	500	550	600	650	700	750	800	850	900	950	1000	1050	1100	1150	1200	1250
KG	7.16	7.68	8.2	8.72	9.24	9.76	10.28	10.8	11.32	11.84	12.36	12.88	13.4	13.92	14.44	14.96	15.48	16	16.52	17.04	17.56
Linear Speed mm/s — Lead 5	300																				

※2 When the stroke is 50mm, if fixing the body from the top to the bottom, the fixing hole will be blocked by slider and only can be uses 4 screws to fix;as a result, suggest that fixing actuator body from the bottom to the top.

BL Motor Right Side

2D CAD 3D CAD Download CAD data at www.toyorobot.com

Unit : mm

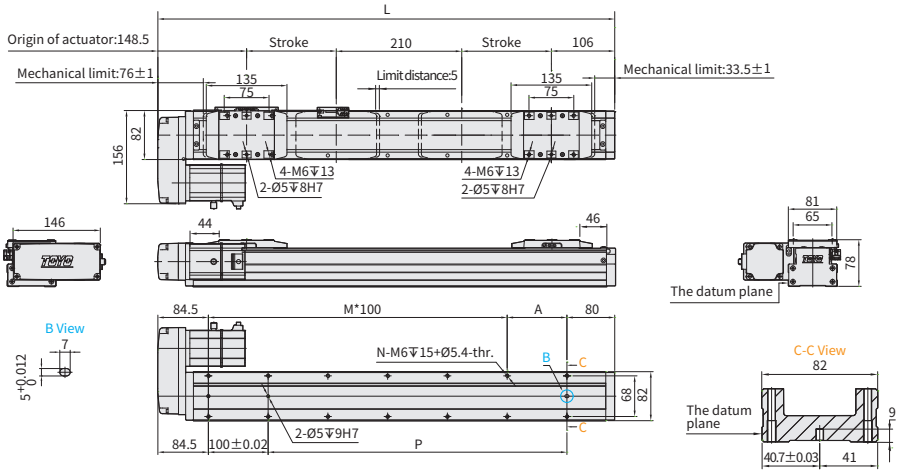

Stroke	25	50※2	75	100	125	150	175	200	225	250	275	300	325	350	375	400	425	450	475	500	525
Limit Stroke (±1)	45	70	95	120	145	170	195	220	245	270	295	320	345	370	395	420	445	450	495	520	545
L	514.5	564.5	614.5	664.5	714.5	764.5	814.5	864.5	914.5	964.5	1014.5	1064.5	1114.5	1164.5	1214.5	1264.5	1314.5	1364.5	1414.5	1464.5	1514.5
A	50	100	50	100	50	100	50	100	50	100	50	100	50	100	50	100	50	100	50	100	50
M	3	3	4	4	5	5	6	6	7	7	8	8	9	9	10	10	11	11	12	12	13
N	10	10	12	12	14	14	16	16	18	18	20	20	22	22	24	24	26	26	28	28	30
P	250	300	350	400	450	500	550	600	650	700	750	800	850	900	950	1000	1050	1100	1150	1200	1250
KG	7.16	7.68	8.2	8.72	9.24	9.76	10.28	10.8	11.32	11.84	12.36	12.88	13.4	13.92	14.44	14.96	15.48	16	16.52	17.04	17.56
Linear Speed mm/s — Lead 5	300																				

※2 When the stroke is 50mm, if fixing the body from the top to the bottom, the fixing hole will be blocked by slider and only can be uses 4 screws to fix;as a result, suggest that fixing actuator body from the bottom to the top.

GTH4D

▶ Integrated Linear Bearing ▶ Ball Screw Drive

The picture is just for the reference. Please check the the actual dimensions on the drawing.

Ordering Method

GTH4D - L2 - 100 - BC - X - C4 - 0001

Model | **Special Order No.**

Stroke

50-900mm
50mm increments

Ball Screw Lead

2	2mm
6	6mm
12	12mm

Motor Position

BC	Motor Exposed
BM	Motor Bottom Side
BL	Motor Left Side
BR	Motor Right Side
-*2	No Motor Position

Motor Flange、Power Output

With Motor Flange & Coupling				
M	Mitsubishi	05	50W	B
P	Panasonic	10	-	
Y	Yaskawa	20	-	
T	Delta	40	-	
X	Others*1			
Without Motor Flange & Coupling				
K	No Motor Flange & Coupling*2			

*1 When choosing non-standard motor X, the motor spec must be provided and confirmed by TOYO for installation before the order is established.

*2 When K is selected, the motor position need no description.

Home Sensor

Outside	
C	Motor Side
D	Opposite Motor Side
No Sensor	
E	No Sensor

*When the stroke is 50mm, the sensor installation has the following restrictions:

1.The home sensor and the limit sensor must be installed on different sides of the body.

2.The sensor trigger device must be installed on both sides of the device.

Limit Sensor

Outside	
3	1 Pc
4	2 Pc
No Sensor	
5	No Sensor

MSiTEC PRODUCTIVITY THROUGH TECHNOLOGY
Visit msitec.com
Call 866-397-7388
Email info@msitec.com

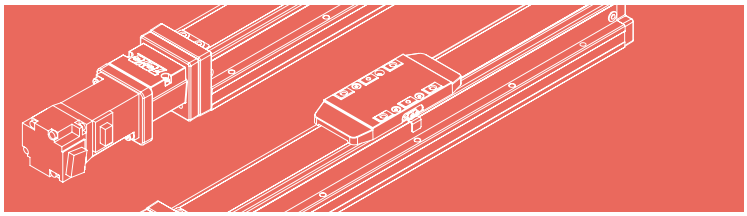

Specification

Item							
Ball screw	Outer dia. & Precision grade			mm	Ø10 & C7		
	Lead			mm	2	6	12
	Maximum Rotating speed			rpm	3000	3600	3600
	Maximum linear speed ※1			mm/s	100	360	720
	Basic dynamic load rating Ca			N	2265	2537	1740
	Basic static load rating Coa			N	4839	4569	3052
	Load factor				1.2	1.35	1.35
Linear Guide	Dynamic horizontal	100 Km of travel		kgf	1140		
		1000 Km of travel		kgf	529		
		10000 Km of travel		kgf	246		
	Static horizontal			kg	2094		
Fixed bearing	Basic dynamic load rating Cr			N	1730		
	Static load rating Cor			N	3800		
Common Spec	Repeatability			mm	±0.005		
	Start torpue			N.cm	2		
	Allowable input torque			N.m	1.1		
	Maximum acceleration			m/s^2	10		
	Friction coefficient				0.03		
	Stroke interval			mm	50-900 (50 increments)		
	Ambient temperature ※2			°C	0~+40		

※1 Estimated max speed and max payload when using a standard 100W servo motor.
(Confirm max speed and payload at the same time.)

※2 Customized temperature:-20°C~ 80°C. special grease requirement need to follow customization process.

Static Loading Moment

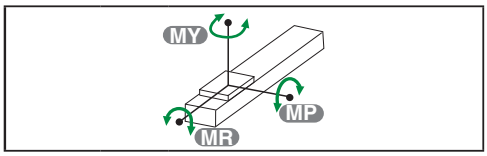

MY	N.m	188
MP	N.m	762
MR	N.m	762

Dynamic Loading Moment

Travel	km	100	1000	10000
MY	N.m	120.5	55.9	26.0
MP	N.m	120.5	55.9	26.0
MR	N.m	60.7	28.2	13.1

Parts list

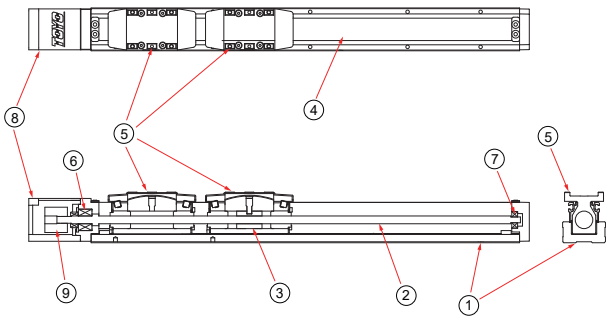

No.	Part Description	Material
1	Housing	AL6463
2	Ball Screw	S45C
3	Ball Screw Nut	S45C
4	Steel Band	SUS430
5	Carriage	SNCM21H
6	Ball Bearing Dual Arrangement	SUJ2
7	Ball Bearing	SUJ2
8	Fixed Support Block-Inline Motor Mounting Bracket	AL6061
9	Coupling- Clamping	AL6061

GTH4D

▶ Integrated Linear Bearing ▶ Ball Screw Drive

BC Motor Exposed

2D CAD 3D CAD Download CAD data at www.toyorobot.com

Unit : mm

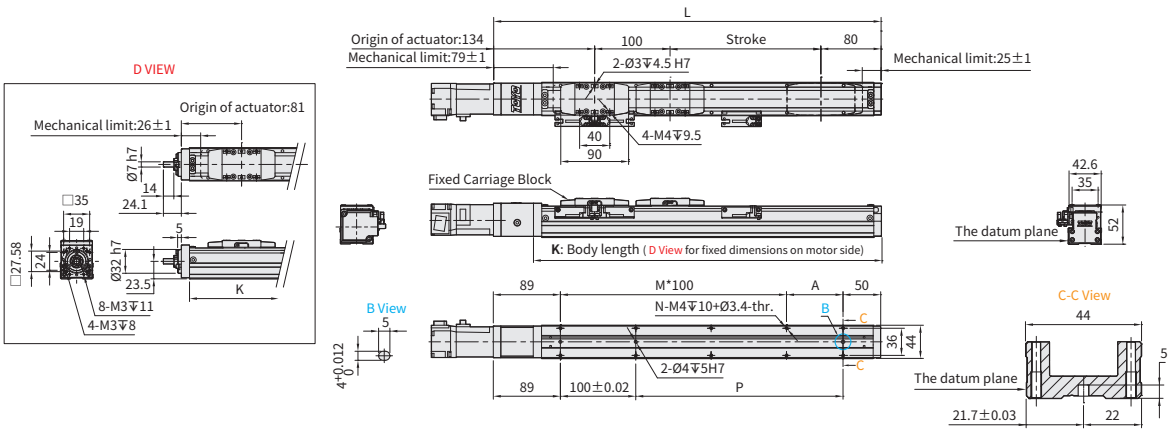

Stroke		50	100	150	200	250	300	350	400	450	500	550	600	650	700	750	800	850	900
Limit Stroke (±1)		70	120	170	220	270	320	370	420	470	520	570	620	670	720	770	820	870	920
L		364	414	464	514	564	614	664	714	764	814	864	914	964	1014	1064	1114	1164	1214
A		25	75	25	75	25	75	25	75	25	75	25	75	25	75	25	75	25	75
M		2	2	3	3	4	4	5	5	6	6	7	7	8	8	9	9	10	10
N		8	8	10	10	12	12	14	14	16	16	18	18	20	20	22	22	24	24
P		125	175	225	275	325	375	425	475	525	575	625	675	725	775	825	875	925	975
KG※1		1.56	1.74	1.92	2.1	2.28	2.46	2.64	2.82	3	3.18	3.36	3.54	3.72	3.9	4.08	4.26	4.44	4.62
K		311	361	411	461	511	561	611	661	711	761	811	861	911	961	1011	1061	1111	1161
Linear Speed mm/s	Lead 2	100									90	80	70	60	50	43	40	37	33
	Lead 6	360							330	320	270	240	210	180	150	130	120	110	100
	Lead 12	720							660	640	540	480	420	360	300	260	240	220	200

※1 KG refers to the weight with motor related accessories (excluding motor), not corresponding to K Type.
※2 The dual-carriage design does not feature an internal synchronous mechanism; the customer can select an external connection to best-fit application requirements.

BM Motor Bottom Side

2D CAD 3D CAD Download CAD data at www.toyorobot.com

Unit : mm

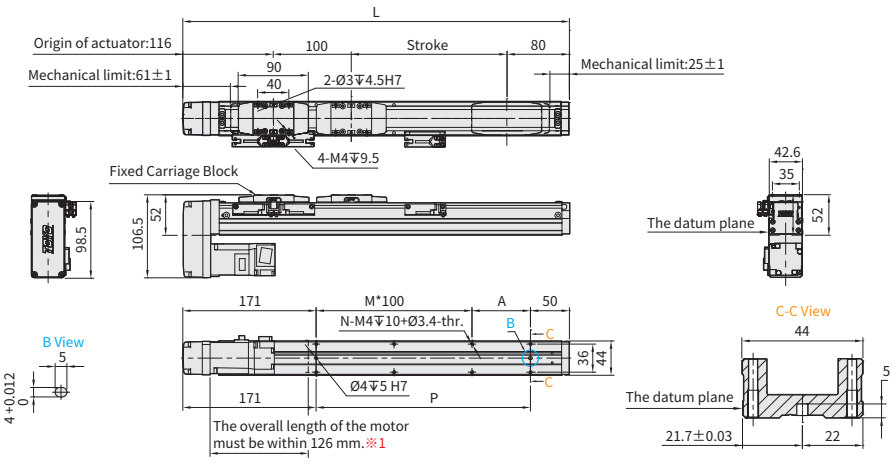

Stroke		50	100	150	200	250	300	350	400	450	500	550	600	650	700	750	800	850	900
Limit Stroke (±1)		70	120	170	220	270	320	370	420	470	520	570	620	670	720	770	820	870	920
L		346	396	446	496	546	596	646	696	746	796	846	896	946	996	1046	1096	1146	1196
A		25	75	25	75	25	75	25	75	25	75	25	75	25	75	25	75	25	75
M		1	1	2	2	3	3	4	4	5	5	6	6	7	7	8	8	9	9
N		6	6	8	8	10	10	12	12	14	14	16	16	18	18	20	20	22	22
P		125	175	225	275	325	375	425	475	525	575	625	675	725	775	825	875	925	975
KG		1.67	1.85	2.03	2.21	2.39	2.57	2.75	2.93	3.11	3.29	3.47	3.65	3.83	4.01	4.19	4.37	4.55	4.73
Linear Speed mm/s	Lead 2	100									90	80	70	60	50	43	40	37	33
	Lead 6	360							330	320	270	240	210	180	150	130	120	110	100
	Lead 12	720							660	640	540	480	420	360	300	260	240	220	200

※1 When motor with brake assembled on lower side, or the total length over than spec limit, it may not use standard pinhole. Please contact our sales department if you need more information & requirement.
※2 The dual-carriage design does not feature an internal synchronous mechanism; the customer can select an external connection to best-fit application requirements.

MSITEC PRODUCTIVITY THROUGH TECHNOLOGY
Visit msitec.com
Call 866-397-7388
Email info@msitec.com

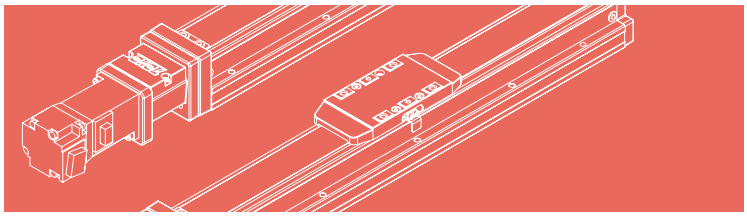

BR Motor Left Side

2D CAD 3D CAD Download CAD data at www.toyorobot.com

Unit : mm

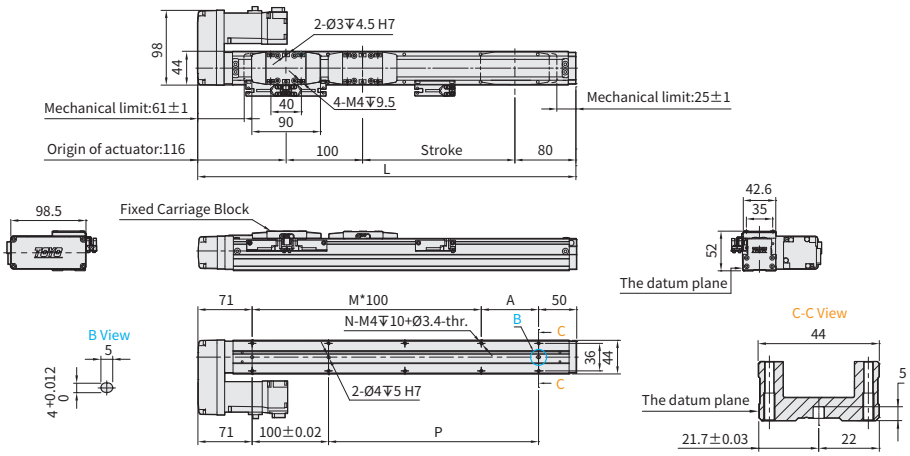

Stroke		50	100	150	200	250	300	350	400	450	500	550	600	650	700	750	800	850	900
Limit Stroke (±1)		70	120	170	220	270	320	370	420	470	520	570	620	670	720	770	820	870	920
L		346	396	446	496	546	596	646	696	746	796	846	896	946	996	1046	1096	1146	1196
A		25	75	25	75	25	75	25	75	25	75	25	75	25	75	25	75	25	75
M		2	2	3	3	4	4	5	5	6	6	7	7	8	8	9	9	10	10
N		8	8	10	10	12	12	14	14	16	16	18	18	20	20	22	22	24	24
P		125	175	225	275	325	375	425	475	525	575	625	675	725	775	825	875	925	975
KG		1. 67	1. 85	2. 03	2. 21	2. 39	2. 57	2. 75	2. 93	3. 11	3. 29	3. 47	3. 65	3. 83	4. 01	4. 19	4. 37	4. 55	4. 73
Linear Speed mm/s	Lead 2	100									90	80	70	60	50	43	40	37	33
	Lead 6	360							330	320	270	240	210	180	150	130	120	110	100
	Lead 12	720							660	640	540	480	420	360	300	260	240	220	200

※2 The dual-carriage design does not feature an internal synchronous mechanism; the customer can select an external connection to best-fit application requirements.

BL Motor Right Side

2D CAD 3D CAD Download CAD data at www.toyorobot.com

Unit : mm

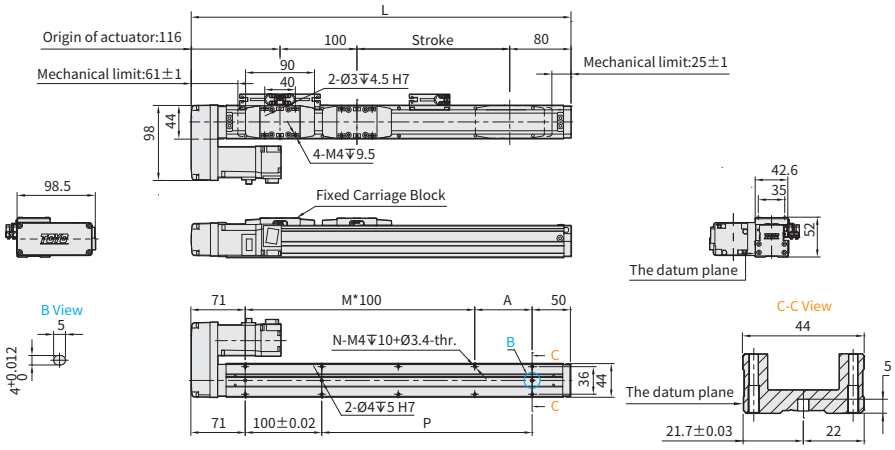

Stroke		50	100	150	200	250	300	350	400	450	500	550	600	650	700	750	800	850	900
Limit Stroke (±1)		70	120	170	220	270	320	370	420	470	520	570	620	670	720	770	820	870	920
L		346	396	446	496	546	596	646	696	746	796	846	896	946	996	1046	1096	1146	1196
A		25	75	25	75	25	75	25	75	25	75	25	75	25	75	25	75	25	75
M		2	2	3	3	4	4	5	5	6	6	7	7	8	8	9	9	10	10
N		8	8	10	10	12	12	14	14	16	16	18	18	20	20	22	22	24	24
P		125	175	225	275	325	375	425	475	525	575	625	675	725	775	825	875	925	975
KG		1. 67	1. 85	2. 03	2. 21	2. 39	2. 57	2. 75	2. 93	3. 11	3. 29	3. 47	3. 65	3. 83	4. 01	4. 19	4. 37	4. 55	4. 73
Linear Speed mm/s	Lead 2	100									90	80	70	60	50	43	40	37	33
	Lead 6	360							330	320	270	240	210	180	150	130	120	110	100
	Lead 12	720							660	640	540	480	420	360	300	260	240	220	200

※2 The dual-carriage design does not feature an internal synchronous mechanism; the customer can select an external connection to best-fit application requirements.

GTH4D

▶ Integrated Linear Bearing ▶ Ball Screw Drive

The picture is just for the reference. Please check the the actual dimensions on the drawing.

Ordering Method

GTH4D - L2 - 100 - BC - X - C4 - 0001

Model | **Special Order No.**

Stroke

50-900mm
50mm increments

Ball Screw Lead

2	2mm
6	6mm
12	12mm

Motor Position

BC	Motor Exposed
BM	Motor Bottom Side
BL	Motor Left Side
BR	Motor Right Side
-*2	No Motor Position

Motor Flange、Power Output

With Motor Flange & Coupling				
M	Mitsubishi	05	-	B
P	Panasonic	10	100W	
Y	Yaskawa	20	-	
T	Delta	40	-	
X	Others*1			
Without Motor Flange & Coupling				
K	No Motor Flange & Coupling*2			

*1 When choosing non-standard motor X, the motor spec must be provided and confirmed by TOYO for installation before the order is established.

*2 When K is selected, the motor position need no description.

Home Sensor

Outside	
C	Motor Side
D	Opposite Motor Side
No Sensor	
E	No Sensor

*When the stroke is 50mm, the sensor installation has the following restrictions:

1.The home sensor and the limit sensor must be installed on different sides of the body.

2.The sensor trigger device must be installed on both sides of the device.

Limit Sensor

Outside	
3	1 Pc
4	2 Pc
No Sensor	
5	No Sensor

MSiTEC PRODUCTIVITY THROUGH TECHNOLOGY
Visit msitec.com
Call 866-397-7388
Email info@msitec.com

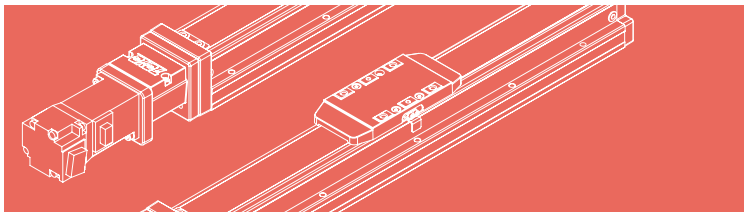

Specification

Item							
Ball screw	Outer dia. & Precision grade		mm	Ø10 & C7		
	Lead		mm	2	6	12
	Maximum Rotating speed		rpm	3000	3600	3600
	Maximum linear speed ※1		mm/s	100	360	720
	Basic dynamic load rating Ca		N	2265	2537	1740
	Basic static load rating Coa		N	4839	4569	3052
	Load factor			1.2	1.35	1.35
Linear Guide	Dynamic horizontal	100 Km of travel	kgf	1140		
		1000 Km of travel	kgf	529		
		10000 Km of travel	kgf	246		
	Static horizontal		kg	2094		
Fixed bearing	Basic dynamic load rating Cr		N	1730		
	Static load rating Cor		N	3800		
Common Spec	Repeatability		mm	±0.005		
	Start torpue		N.cm	2		
	Allowable input torque		N.m	1.1		
	Maximum acceleration		m/s^2	10		
	Friction coefficient			0.03		
	Stroke interval		mm	50-900 (50 increments)		
	Ambient temperature ※2		°C	0~+40		

※1 Estimated max speed and max payload when using a standard 100W servo motor.
(Confirm max speed and payload at the same time.)

※2 Customized temperature:-20°C~ 80°C. special grease requirement need to follow customization process.

Static Loading Moment

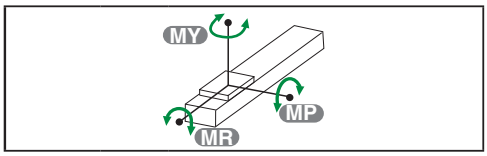

MY	N.m	188
MP	N.m	762
MR	N.m	762

Dynamic Loading Moment

Travel	km	100	1000	10000
MY	N.m	120.5	55.9	26.0
MP	N.m	120.5	55.9	26.0
MR	N.m	60.7	28.2	13.1

Parts list

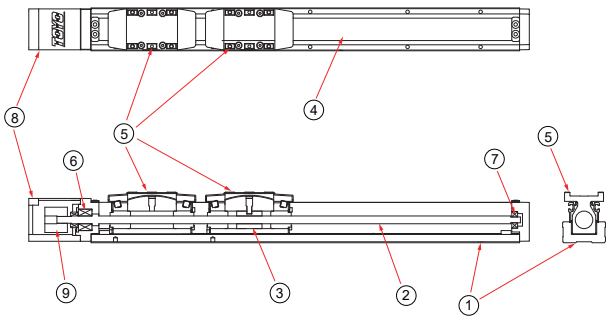

No.	Part Description	Material
1	Housing	AL6463
2	Ball Screw	S45C
3	Ball Screw Nut	S45C
4	Steel Band	SUS430
5	Carriage	SNCM21H
6	Ball Bearing Dual Arrangement	SUJ2
7	Ball Bearing	SUJ2
8	Fixed Support Block-Inline Motor Mounting Bracket	AL6061
9	Coupling- Clamping	AL6061

GTH4D

▶ Integrated Linear Bearing ▶ Ball Screw Drive

BC Motor Exposed

2D CAD 3D CAD Download CAD data at www.toyorobot.com

Unit : mm

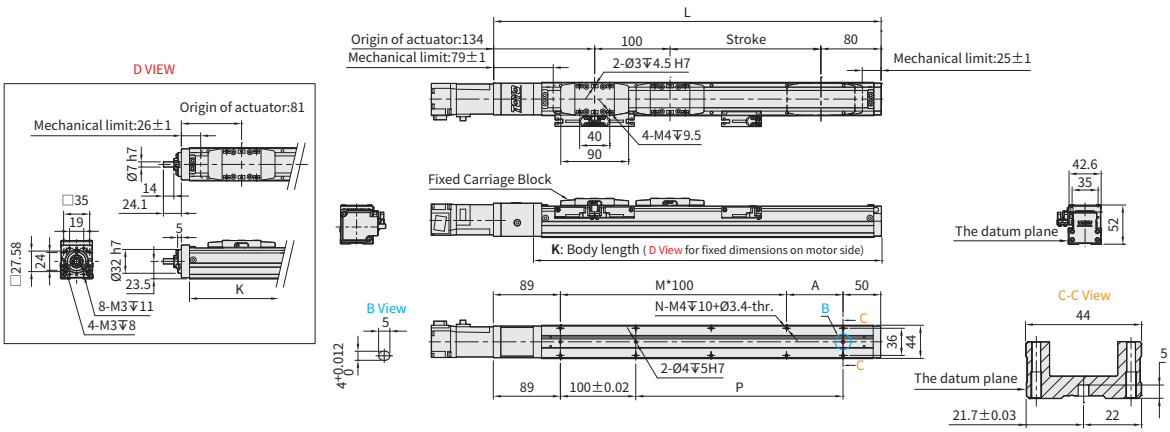

Stroke		50	100	150	200	250	300	350	400	450	500	550	600	650	700	750	800	850	900
Limit Stroke (±1)		70	120	170	220	270	320	370	420	470	520	570	620	670	720	770	820	870	920
L		364	414	464	514	564	614	664	714	764	814	864	914	964	1014	1064	1114	1164	1214
A		25	75	25	75	25	75	25	75	25	75	25	75	25	75	25	75	25	75
M		2	2	3	3	4	4	5	5	6	6	7	7	8	8	9	9	10	10
N		8	8	10	10	12	12	14	14	16	16	18	18	20	20	22	22	24	24
P		125	175	225	275	325	375	425	475	525	575	625	675	725	775	825	875	925	975
KG※1		1.56	1.74	1.92	2.1	2.28	2.46	2.64	2.82	3	3.18	3.36	3.54	3.72	3.9	4.08	4.26	4.44	4.62
K		311	361	411	461	511	561	611	661	711	761	811	861	911	961	1011	1061	1111	1161
Linear Speed mm/s	Lead 2	100									90	80	70	60	50	43	40	37	33
	Lead 6	360							330	320	270	240	210	180	150	130	120	110	100
	Lead 12	720							660	640	540	480	420	360	300	260	240	220	200

※1 KG refers to the weight with motor related accessories (excluding motor), not corresponding to K Type.
※2 The dual-carriage design does not feature an internal synchronous mechanism; the customer can select an external connection to best-fit application requirements.

BM Motor Bottom Side

2D CAD 3D CAD Download CAD data at www.toyorobot.com

Unit : mm

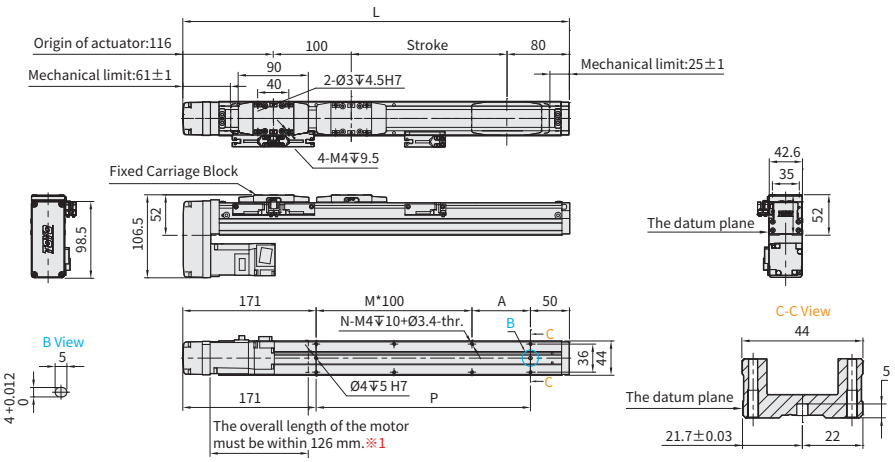

Stroke		50	100	150	200	250	300	350	400	450	500	550	600	650	700	750	800	850	900
Limit Stroke (±1)		70	120	170	220	270	320	370	420	470	520	570	620	670	720	770	820	870	920
L		346	396	446	496	546	596	646	696	746	796	846	896	946	996	1046	1096	1146	1196
A		25	75	25	75	25	75	25	75	25	75	25	75	25	75	25	75	25	75
M		1	1	2	2	3	3	4	4	5	5	6	6	7	7	8	8	9	9
N		6	6	8	8	10	10	12	12	14	14	16	16	18	18	20	20	22	22
P		125	175	225	275	325	375	425	475	525	575	625	675	725	775	825	875	925	975
KG		1.67	1.85	2.03	2.21	2.39	2.57	2.75	2.93	3.11	3.29	3.47	3.65	3.83	4.01	4.19	4.37	4.55	4.73
Linear Speed mm/s	Lead 2	100									90	80	70	60	50	43	40	37	33
	Lead 6	360							330	320	270	240	210	180	150	130	120	110	100
	Lead 12	720							660	640	540	480	420	360	300	260	240	220	200

※1 When motor with brake assembled on lower side, or the total length over than spec limit, it may not use standard pinhole. Please contact our sales department if you need more information & requirement.
※2 The dual-carriage design does not feature an internal synchronous mechanism; the customer can select an external connection to best-fit application requirements.

MSITEC PRODUCTIVITY THROUGH TECHNOLOGY
Visit msitec.com
Call 866-397-7388
Email info@msitec.com

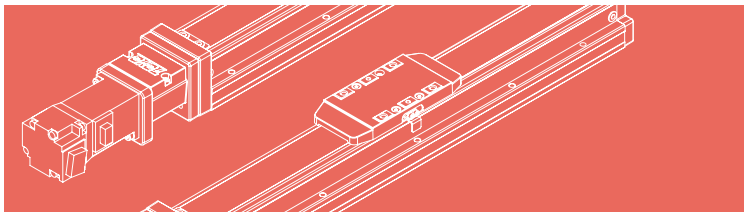

BR Motor Left Side

2D CAD 3D CAD Download CAD data at www.toyorobot.com

Unit : mm

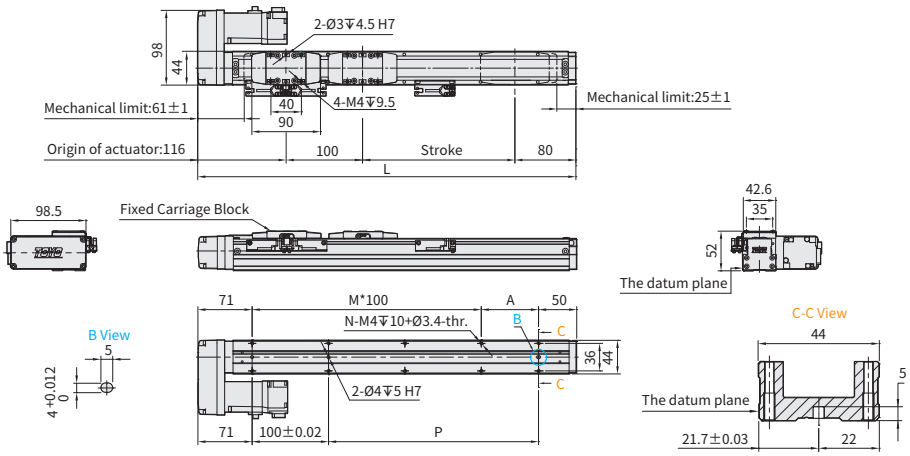

Stroke		50	100	150	200	250	300	350	400	450	500	550	600	650	700	750	800	850	900
Limit Stroke (±1)		70	120	170	220	270	320	370	420	470	520	570	620	670	720	770	820	870	920
L		346	396	446	496	546	596	646	696	746	796	846	896	946	996	1046	1096	1146	1196
A		25	75	25	75	25	75	25	75	25	75	25	75	25	75	25	75	25	75
M		2	2	3	3	4	4	5	5	6	6	7	7	8	8	9	9	10	10
N		8	8	10	10	12	12	14	14	16	16	18	18	20	20	22	22	24	24
P		125	175	225	275	325	375	425	475	525	575	625	675	725	775	825	875	925	975
KG		1. 67	1. 85	2. 03	2. 21	2. 39	2. 57	2. 75	2. 93	3. 11	3. 29	3. 47	3. 65	3. 83	4. 01	4. 19	4. 37	4. 55	4. 73
Linear Speed mm/s	Lead 2	100									90	80	70	60	50	43	40	37	33
	Lead 6	360							330	320	270	240	210	180	150	130	120	110	100
	Lead 12	720							660	640	540	480	420	360	300	260	240	220	200

※2 The dual-carriage design does not feature an internal synchronous mechanism; the customer can select an external connection to best-fit application requirements.

BL Motor Right Side

2D CAD 3D CAD Download CAD data at www.toyorobot.com

Unit : mm

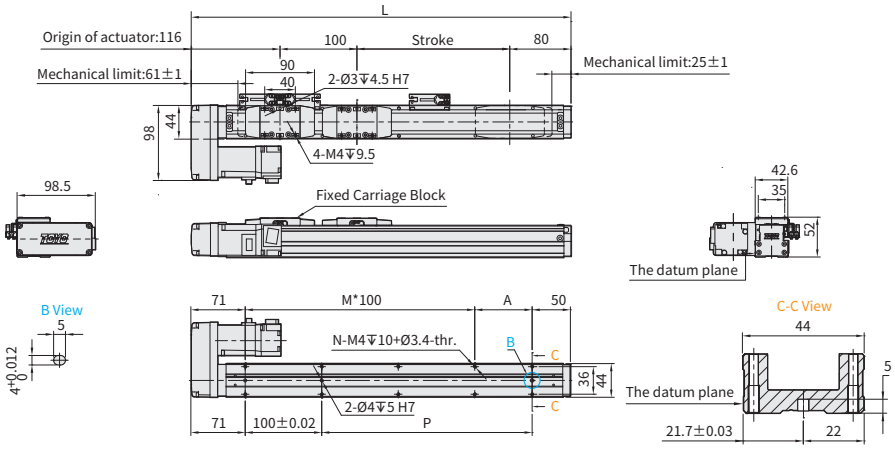

Stroke		50	100	150	200	250	300	350	400	450	500	550	600	650	700	750	800	850	900
Limit Stroke (±1)		70	120	170	220	270	320	370	420	470	520	570	620	670	720	770	820	870	920
L		346	396	446	496	546	596	646	696	746	796	846	896	946	996	1046	1096	1146	1196
A		25	75	25	75	25	75	25	75	25	75	25	75	25	75	25	75	25	75
M		2	2	3	3	4	4	5	5	6	6	7	7	8	8	9	9	10	10
N		8	8	10	10	12	12	14	14	16	16	18	18	20	20	22	22	24	24
P		125	175	225	275	325	375	425	475	525	575	625	675	725	775	825	875	925	975
KG		1. 67	1. 85	2. 03	2. 21	2. 39	2. 57	2. 75	2. 93	3. 11	3. 29	3. 47	3. 65	3. 83	4. 01	4. 19	4. 37	4. 55	4. 73
Linear Speed mm/s	Lead 2	100									90	80	70	60	50	43	40	37	33
	Lead 6	360							330	320	270	240	210	180	150	130	120	110	100
	Lead 12	720							660	640	540	480	420	360	300	260	240	220	200

※2 The dual-carriage design does not feature an internal synchronous mechanism; the customer can select an external connection to best-fit application requirements.

GTH5D

▶ Integrated Linear Bearing ▶ Ball Screw Drive

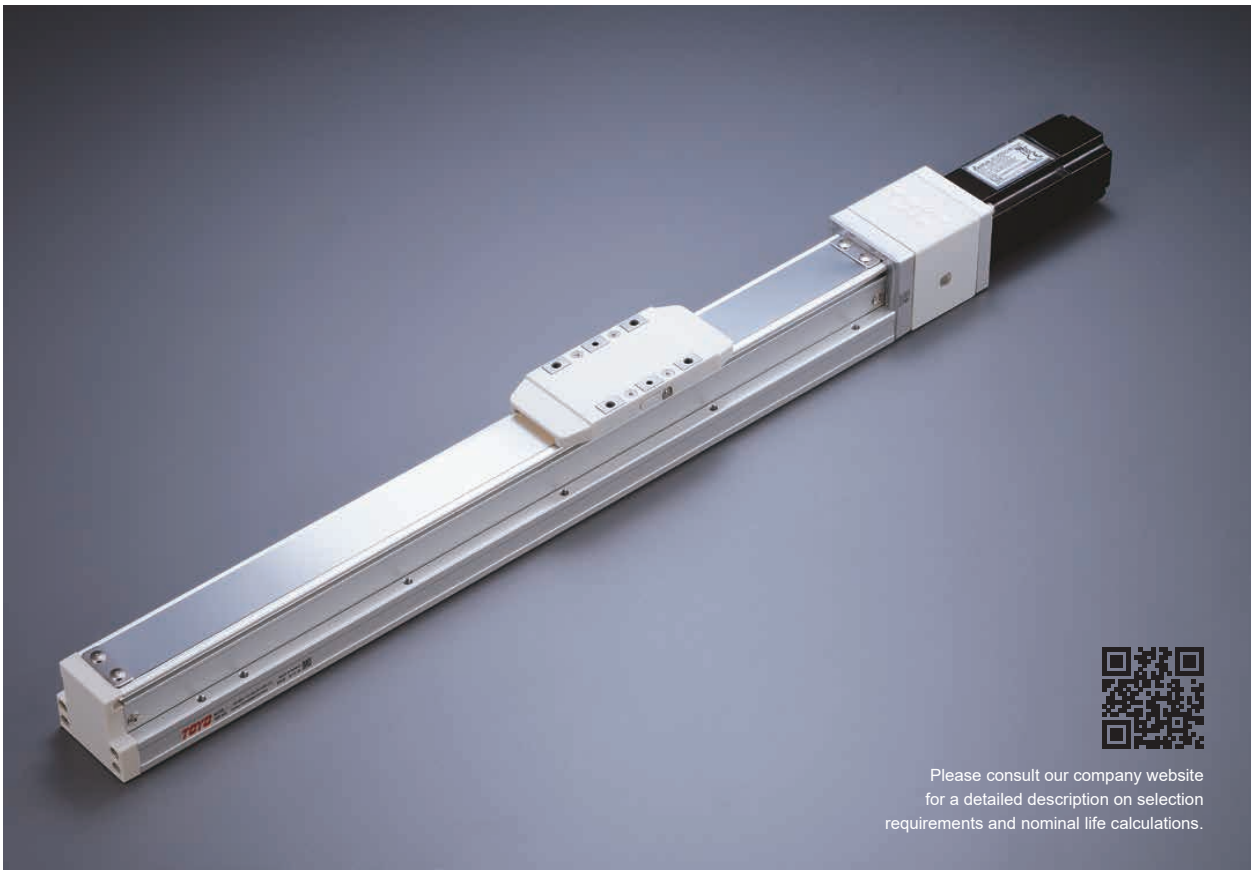

The picture is just for the reference. Please check the the actual dimensions on the drawing.

Ordering Method

GTH5D - L10 - 100 - BC - X - C4 - 0001

Model

Special Order No.

Ballscrew Accuracy Grade

L	Rolled Ballscrews
C	Ground Ballscrews

*C precision-level ground ball screws are not available in all stroke lengths, please consult the model datasheet.

Stroke

Rolled Ballscrews
60-910mm(50mm increments)
Ground Ballscrews
60-160mm(50mm increments)

Ball Screw Lead

2	2mm
5	5mm
10	10mm
20	20mm

Motor Position

BC	Motor Exposed
BM	Motor Bottom Side
BL	Motor Left Side
BR	Motor Right Side
-*2	No Motor Position

Motor Flange、Power Output

With Motor Flange & Coupling				
M	Mitsubishi	05	-	B
P	Panasonic	10	100W	
Y	Yaskawa	20	-	
T	Delta	40	-	
X	Others*1			
Without Motor Flange & Coupling				
K	No Motor Flange & Coupling*2			

*1 When choosing non-standard motor X, the motor spec must be provided and confirmed by TOYO for installation before the order is established.

*2 When K is selected, the motor position need no description.

Home Sensor

Outside	
C	Motor Side
D	Opposite Motor Side
No Sensor	
E	No Sensor

*When the stroke is 50mm, the sensor installation has the following restrictions:

1.The home sensor and the limit sensor must be installed on different sides of the body.

2.The sensor trigger device must be installed on both sides of the device.

Limit Sensor

Outside	
3	1 Pc
4	2 Pc
No Sensor	
5	No Sensor

MSITEC PRODUCTIVITY THROUGH TECHNOLOGY
Visit msitec.com
Call 866-397-7388
Email info@msitec.com

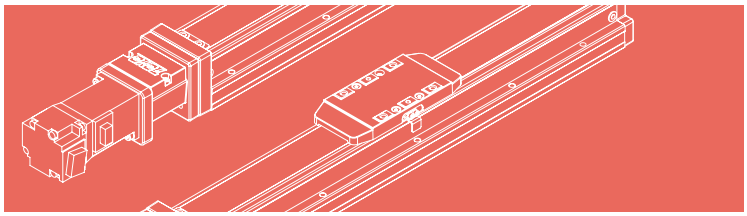

Specification

Item	Ball Screw Spec.	Ballscrew Accuracy Grade Code			L		C
		Ballscrew Accuracy Grade			C7 Rolled Ballscrews		C5 Ground Ballscrews
		Repeatability		mm	±0.005		±0.003
		Stroke (increments)		mm	60-910mm (50 increments)		60-160mm (50 increments)

Item	Ball screw	Outer dia. & Precision grade		mm	Ø12 & C7			
		Lead		mm	2	5	10	20
		Maximum Rotating speed		rpm	3000	3600	3600	3600
		Maximum linear speed ※1		mm/s	100	300	600	1200
		Basic dynamic load rating Ca		N	2411	4829	4680	11284
		Basic static load rating Coa		N	5779	7836	7649	20410
		Load factor			1.2	1.2	1.35	1.35
	Linear Guide	Dynamic horizontal	100 Km of travel	kgf	1393			
			1000 Km of travel	kgf	647			
			10000 Km of travel	kgf	300			
		Static horizontal		kg	2792			
	Fixed bearing	Basic dynamic load rating Cr		N	1730			
		Static load rating Cor		N	3800			
	Common Spec	Start torpue		N.cm	7			
		Allowable input torque		N.m	1.1			
		Maximum acceleration		m/s^2	10			
		Friction coefficient			0.03			
		Ambient temperature ※2		°C	0~+40			

※1 Estimated max speed and max payload when using a standard 100W servo motor.
(Confirm max speed and payload at the same time.)
※2 Customized temperature:-20°C~ 80°C. special grease requirement need to follow customization process.

Static Loading Moment

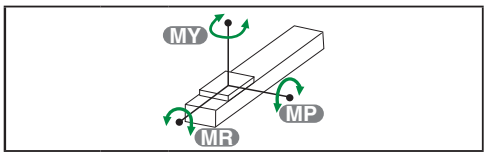

MY	N.m	231
MP	N.m	1038
MR	N.m	1038

Dynamic Loading Moment

Travel	km	100	1000	10000
MY	N.m	206.1	95.7	44.4
MP	N.m	206.1	95.7	44.4
MR	N.m	94.8	44.0	20.4

Parts list

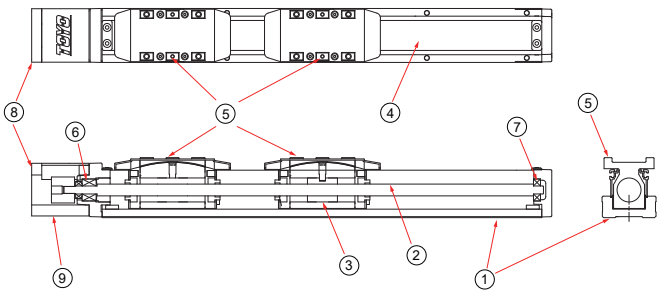

No.	Part Description	Material
1	Housing	AL6463
2	Ball Screw	S45C
3	Ball Screw Nut	S45C
4	Steel Band	SUS430
5	Carriage	SNCM21H
6	Ball Bearing Dual Arrangement	SUJ2
7	Ball Bearing	SUJ2
8	Fixed Support Block-Inline Motor Mounting Bracket	AL6061
9	Coupling- Clamping	AL6061

GTH5D

▶ Integrated Linear Bearing ▶ Ball Screw Drive

BC Motor Exposed

2D CAD 3D CAD Download CAD data at www.toyorobot.com

Unit : mm

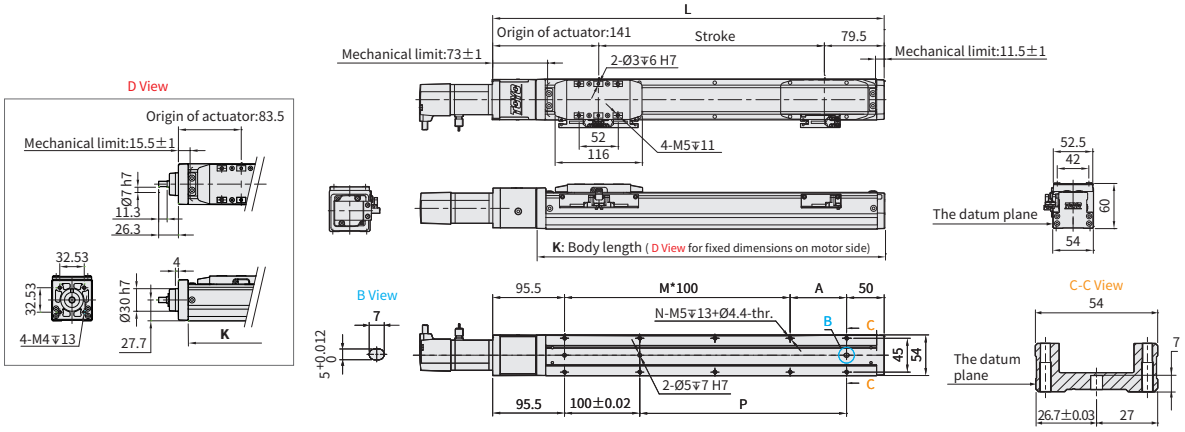

Stroke		60※2	110	160	210	260	310	360	410	460	510	560	610	660	710	760	810	860	910
Limit Stroke (±1)		80	130	180	230	280	330	380	430	480	530	580	630	680	730	780	830	880	930
L		400. 5	450. 5	500. 5	550. 5	600. 5	650. 5	700. 5	750. 5	800. 5	850. 5	900. 5	950. 5	1000. 5	1050. 5	1100. 5	1150. 5	1200. 5	1250. 5
A		75	25	75	25	75	25	75	25	75	25	75	25	75	25	75	25	75	25
M		2	3	3	4	4	5	5	6	6	7	7	8	8	9	9	10	10	11
N		8	10	10	12	12	14	14	16	16	18	18	20	20	22	22	24	24	26
P		175	225	275	325	375	425	475	525	575	625	675	725	775	825	875	925	975	1025
KG		2. 62	2. 92	3. 01	3. 06	3. 26	3. 37	3. 46	3. 66	3. 76	3. 95	4. 09	4. 22	4. 6	4. 98	5. 36	5. 74	6. 12	6. 5
Linear Speed mm/s	Lead 2	100									90	80	70	60	50	47	40	37	33
	Lead 5	300							292	250	225	200	175	150	125	117	100	92	83
	Lead 10	600							583	500	450	400	350	300	250	233	200	183	167
	Lead 20	1200							1167	1000	900	800	700	600	500	467	400	367	333

※2 When the stroke is 60mm, if fixing the body from the top to the bottom, the fixing hole will be blocked by slider and only can be uses 4 screws to fix;as a result, suggest that fixing actuator body from the bottom to the top.
※3 The dual-carriage design does not feature an internal synchronous mechanism; the customer can select an external connection to best-fit application requirements.

BM Motor Bottom Side

2D CAD 3D CAD Download CAD data at www.toyorobot.com

Unit : mm

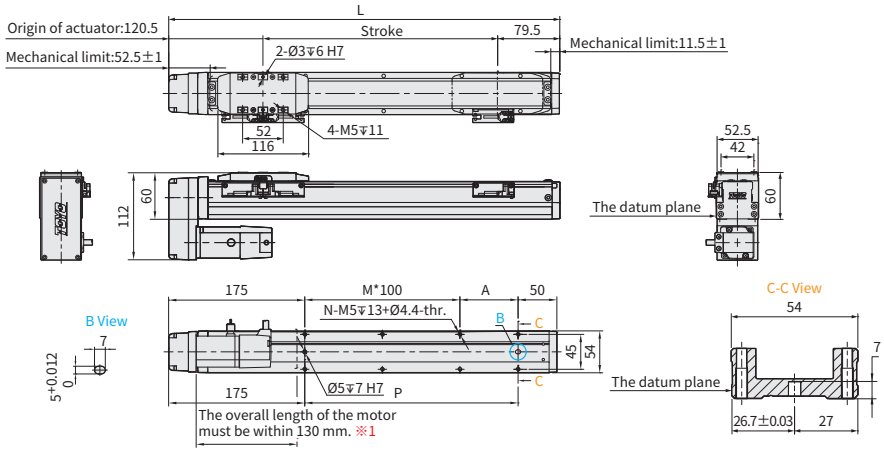

Stroke		60※2	110	160	210	260	310	360	410	460	510	560	610	660	710	760	810	860	910
Limit Stroke (±1)		80	130	180	230	280	330	380	430	480	530	580	630	680	730	780	830	880	930
L		400	450	500	550	600	650	700	750	800	850	900	950	1000	1050	1100	1150	1200	1250
A		75	25	75	25	75	25	75	25	75	25	75	25	75	25	75	25	75	25
M		1	2	2	3	3	4	4	5	5	6	6	7	7	8	8	9	9	10
N		6	8	8	10	10	12	12	14	14	16	16	18	18	20	20	22	22	24
P		175	225	275	325	375	425	475	525	575	625	675	725	775	825	875	925	975	1025
KG		2. 65	2. 93	3. 04	3. 09	3. 29	3. 4	3. 49	3. 69	3. 82	3. 98	4. 11	4. 25	4. 63	5. 01	5. 39	5. 77	6. 15	6. 53
Linear Speed mm/s	Lead 2	100									90	80	70	60	50	47	40	37	33
	Lead 5	300							292	250	225	200	175	150	125	117	100	92	83
	Lead 10	600							583	500	450	400	350	300	250	233	200	183	167
	Lead 20	1200							1167	1000	900	800	700	600	500	467	400	367	333

※1 When motor with brake assembled on lower side, or the total length over than spec limit, it may not use standard pinhole. Please contact our sales department if you need more information & requirement.
※2 When the stroke is 60mm, if fixing the body from the top to the bottom, the fixing hole will be blocked by slider and only can be uses 4 screws to fix;as a result, suggest that fixing actuator body from the bottom to the top.
※3 The dual-carriage design does not feature an internal synchronous mechanism; the customer can select an external connection to best-fit application requirements.

MSITEC PRODUCTIVITY THROUGH TECHNOLOGY
Visit msitec.com
Call 866-397-7388
Email info@msitec.com

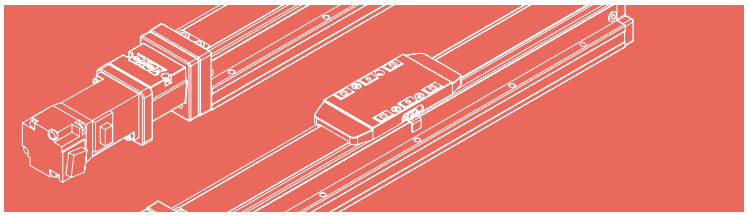

BR Motor Left Side

2D CAD 3D CAD Download CAD data at www.toyorobot.com

Unit : mm

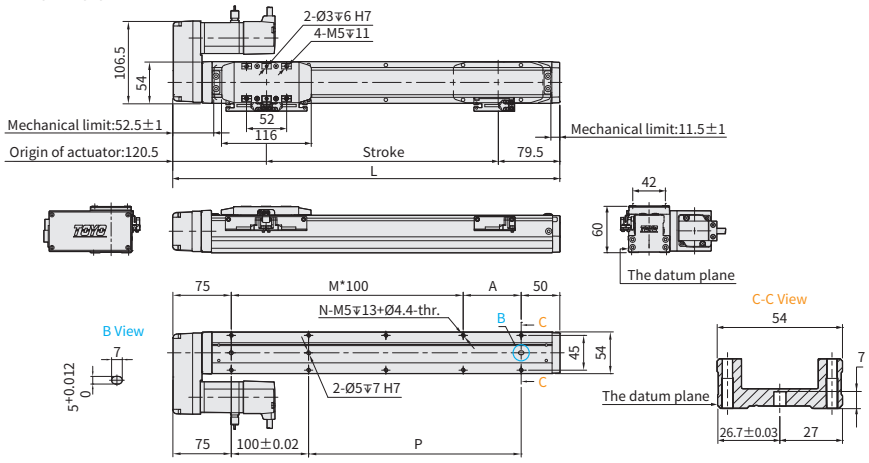

Stroke		60※2	110	160	210	260	310	360	410	460	510	560	610	660	710	760	810	860	910
Limit Stroke (±1)		80	130	180	230	280	330	380	430	480	530	580	630	680	730	780	830	880	930
L		400	450	500	550	600	650	700	750	800	850	900	950	1000	1050	1100	1150	1200	1250
A		75	25	75	25	75	25	75	25	75	25	75	25	75	25	75	25	75	25
M		2	3	3	4	4	5	5	6	6	7	7	8	8	9	9	10	10	11
N		8	10	10	12	12	14	14	16	16	18	18	20	20	22	22	24	24	26
P		175	225	275	325	375	425	475	525	575	625	675	725	775	825	875	925	975	1025
KG		2.65	2.93	3.04	3.09	3.29	3.4	3.49	3.69	3.82	3.98	4.11	4.25	4.63	5.01	5.39	5.77	6.15	6.53
Linear Speed mm/s	Lead 2	100									90	80	70	60	50	47	40	37	33
	Lead 5	300									225	200	175	150	125	117	100	92	83
	Lead 10	600									450	400	350	300	250	233	200	183	167
	Lead 20	1200									900	800	700	600	500	467	400	367	333

※2 When the stroke is 60mm, if fixing the body from the top to the bottom, the fixing hole will be blocked by slider and only can be uses 4 screws to fix;as a result, suggest that fixing actuator body from the bottom to the top.
※3 The dual-carriage design does not feature an internal synchronous mechanism; the customer can select an external connection to best-fit application requirements.

BL Motor Right Side

2D CAD 3D CAD Download CAD data at www.toyorobot.com

Unit : mm

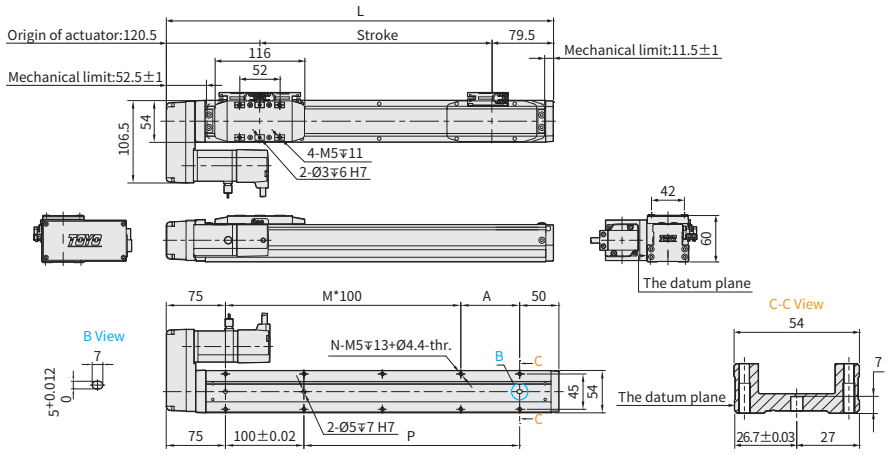

Stroke		60※2	110	160	210	260	310	360	410	460	510	560	610	660	710	760	810	860	910
Limit Stroke (±1)		80	130	180	230	280	330	380	430	480	530	580	630	680	730	780	830	880	930
L		400	450	500	550	600	650	700	750	800	850	900	950	1000	1050	1100	1150	1200	1250
A		75	25	75	25	75	25	75	25	75	25	75	25	75	25	75	25	75	25
M		2	3	3	4	4	5	5	6	6	7	7	8	8	9	9	10	10	11
N		8	10	10	12	12	14	14	16	16	18	18	20	20	22	22	24	24	26
P		175	225	275	325	375	425	475	525	575	625	675	725	775	825	875	925	975	1025
KG		2.65	2.93	3.04	3.09	3.29	3.4	3.49	3.69	3.82	3.98	4.11	4.25	4.63	5.01	5.39	5.77	6.15	6.53
Linear Speed mm/s	Lead 2	100									90	80	70	60	50	47	40	37	33
	Lead 5	300									225	200	175	150	125	117	100	92	83
	Lead 10	600									450	400	350	300	250	233	200	183	167
	Lead 20	1200									900	800	700	600	500	467	400	367	333

※2 When the stroke is 60mm, if fixing the body from the top to the bottom, the fixing hole will be blocked by slider and only can be uses 4 screws to fix;as a result, suggest that fixing actuator body from the bottom to the top.
※3 The dual-carriage design does not feature an internal synchronous mechanism; the customer can select an external connection to best-fit application requirements.

GTH8D

▶ Integrated Linear Bearing ▶ Ball Screw Drive

The picture is just for the reference. Please check the the actual dimensions on the drawing.

Ordering Method

GTH8D - L10 - 100 - BC - X - C4 - 0001

Model

Special Order No.

Ballscrew Accuracy Grade

L	Rolled Ballscrews
C	Ground Ballscrews

*C precision-level ground ball screws are not available in all stroke lengths, please consult the model datasheet.

Stroke

Rolled Ballscrews
50-1100mm(50mm increments)
Ground Ballscrews
50-550mm(50mm increments)

Ball Screw Lead

5	5mm
10	10mm
20	20mm

Motor Position

BC	Motor Exposed
BM	Motor Bottom Side
BL	Motor Left Side
BR	Motor Right Side
-*2	No Motor Position

Motor Flange、Power Output

With Motor Flange & Coupling				
M	Mitsubishi	05	-	B
P	Panasonic	10	-	
Y	Yaskawa	20	200W	
T	Delta	40	-	
X	Others*1			
Without Motor Flange & Coupling				
K	No Motor Flange & Coupling*2			

*1 When choosing non-standard motor X, the motor spec must be provided and confirmed by TOYO for installation before the order is established.

*2 When K is selected, the motor position need no description.

Home Sensor

Outside	
C	Motor Side
D	Opposite Motor Side
No Sensor	
E	No Sensor

*When the stroke is 50mm, the sensor installation has the following restrictions:

1.The home sensor and the limit sensor must be installed on different sides of the body.

2.The sensor trigger device must be installed on both sides of the device.

Limit Sensor

Outside	
3	1 Pc
4	2 Pc
No Sensor	
5	No Sensor

MSiTEC PRODUCTIVITY THROUGH TECHNOLOGY
Visit msitec.com
Call 866-397-7388
Email info@msitec.com

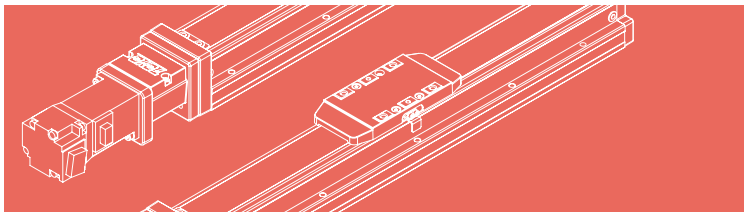

Specification

Item	Ball Screw Spec.	Ballscrew Accuracy Grade Code		L	C
		Ballscrew Accuracy Grade		C7 Rolled Ballscrews	C5 Ground Ballscrews
		Repeatability	mm	±0.005	±0.003
		Stroke (increments)	mm	50-1100mm (50 increments)	50-700mm (50 increments)

Item	Ball screw	Outer dia. & Precision grade	mm	Ø16 & C7		
		Lead	mm	5	10	20
		Maximum Rotating speed	rpm	3600	3600	3600
		Maximum linear speed ※1	mm/s	300	600	1200
		Basic dynamic load rating Ca	N	8042	6300	4152
		Basic static load rating Coa	N	15088	11596	7439
		Load factor		1.2	1.35	1.35
	Linear Guide	Dynamic horizontal 100 Km of travel	kgf	3076		
		Dynamic horizontal 1000 Km of travel	kgf	1428		
		Dynamic horizontal 10000 Km of travel	kgf	663		
		Static horizontal	kg	5655		
	Fixed bearing	Basic dynamic load rating Cr	N	2600		
		Static load rating Cor	N	4750		
	Common Spec	Start torpue	N.cm	10		
		Allowable input torque	N.m	2.2		
		Maximum acceleration	m/s^2	10		
		Friction coefficient		0.03		
		Ambient temperature ※2	°C	0~+40		

※1 Estimated max speed and max payload when using a standard 100W servo motor.
(Confirm max speed and payload at the same time.)

※2 Customized temperature:-20°C~ 80°C. special grease requirement need to follow customization process.

Static Loading Moment

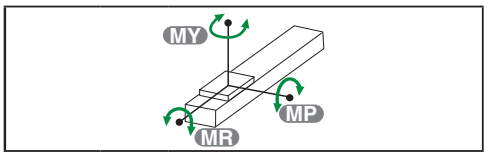

MY	N.m	1011
MP	N.m	2565
MR	N.m	2565

Dynamic Loading Moment

Travel	km	100	1000	10000
MY	N.m	487.6	226.3	105.0
MP	N.m	487.6	226.3	105.0
MR	N.m	327.0	151.8	70.4

Parts list

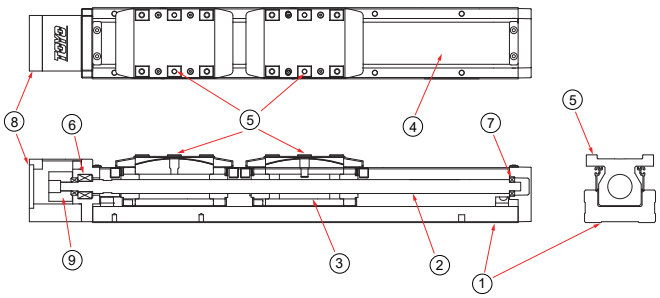

No.	Part Description	Material
1	Housing	AL6463
2	Ball Screw	S45C
3	Ball Screw Nut	S45C
4	Steel Band	SUS430
5	Carriage	SNCM21H
6	Ball Bearing Dual Arrangement	SUJ2
7	Ball Bearing	SUJ2
8	Fixed Support Block-Inline Motor Mounting Bracket	AL6061
9	Coupling- Clamping	AL6061

GTH8D

▶ Integrated Linear Bearing ▶ Ball Screw Drive

BC Motor Exposed

2D CAD 3D CAD Download CAD data at www.toyorobot.com

Unit : mm

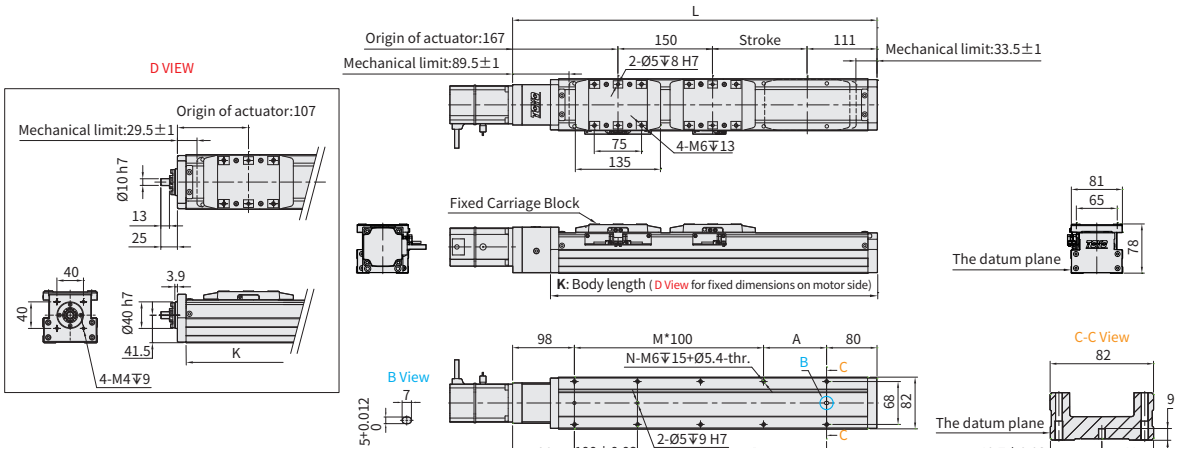

Stroke		50※2	100	150	200	250	300	350	400	450	500	550	600	650	700	750	800	850	900	950	1000	1050	1100
Limit Stroke (±1)		70	120	170	220	270	320	370	420	470	520	570	620	670	720	770	820	870	920	970	1020	1070	1120
L		478	528	578	628	678	728	778	828	878	928	978	1028	1078	1128	1178	1228	1278	1328	1378	1428	1478	1528
A		100	50	100	50	100	50	100	50	100	50	100	50	100	50	100	50	100	50	100	50	100	50
M		2	3	3	4	4	5	5	6	6	7	7	8	8	9	9	10	10	11	11	12	12	13
N		8	10	10	12	12	14	14	16	16	18	18	20	20	22	22	24	24	26	26	27	27	28
P		200	250	300	350	400	450	500	550	600	650	700	750	800	850	900	950	1000	1050	1100	1150	1200	1250
KG※1		6. 47	6. 82	7. 15	7. 47	7. 82	8. 11	8. 44	8. 88	9. 18	9. 59	9. 88	10. 12	10. 43	10. 84	11. 09	11. 48	11. 75	12. 17	12. 59	13. 01	13. 43	13. 85
K		418	468	518	568	618	668	718	768	818	868	918	968	1018	1068	1118	1168	1218	1268	1318	1368	1418	1468
Linear Speed mm/s	Lead 5	300									292	250	225	200	175	150	142	133	117	108	100	92	83
	Lead 10	600									583	500	450	40	350	300	283	267	233	217	200	183	167
	Lead 20	1200									1167	1000	900	800	700	600	567	533	467	433	400	367	333

※1 KG refers to the weight with motor related accessories (excluding motor), not corresponding to K Type.
※2 When the stroke is 50mm, if fixing the body from the top to the bottom, the fixing hole will be blocked by slider and only can be uses 4 screws to fix;as a result, suggest that fixing actuator body from the bottom to the top.
※3 The dual-carriage design does not feature an internal synchronous mechanism; the customer can select an external connection to best-fit application requirements.

BM Motor Bottom Side

2D CAD 3D CAD Download CAD data at www.toyorobot.com

Unit : mm

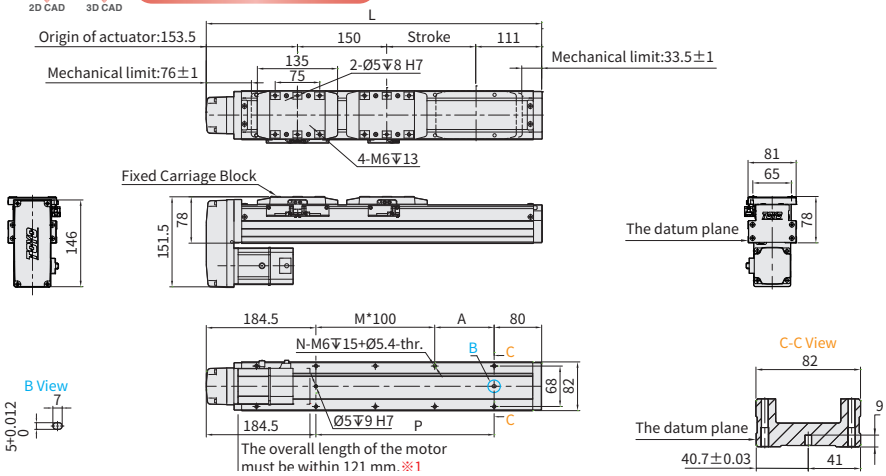

Stroke		50※2	100	150	200	250	300	350	400	450	500	550	600	650	700	750	800	850	900	950	1000	1050	1100
Limit Stroke (±1)		70	120	170	220	270	320	370	420	470	520	570	620	670	720	770	820	870	920	970	1020	1070	1120
L		464. 5	514. 5	564. 5	614. 5	664. 5	714. 5	764. 5	814. 5	864. 5	914. 5	964. 5	1014. 5	1064. 5	1114. 5	1164. 5	1214. 5	1264. 5	1314. 5	1364. 5	1414. 5	1464. 5	1514. 5
A		100	50	100	50	100	50	100	50	100	50	100	50	100	50	100	50	100	50	100	50	100	50
M		1	2	2	3	3	4	4	5	5	6	6	7	7	8	8	9	9	10	10	11	11	12
N		6	8	8	10	10	12	12	14	14	16	16	18	18	20	20	22	22	24	24	26	26	27
P		200	250	300	350	400	450	500	550	600	650	700	750	800	850	900	950	1000	1050	1100	1150	1200	1250
KG※1		6. 56	6. 86	7. 19	7. 51	7. 86	8. 15	8. 48	8. 92	9. 22	9. 63	9. 92	10. 16	10. 47	10. 88	11. 13	11. 55	11. 79	12. 21	12. 63	13. 05	13. 47	13. 89
Linear Speed mm/s	Lead 5	300									292	250	225	200	175	150	142	133	117	108	100	92	83
	Lead 10	600									583	500	450	400	350	300	283	267	233	217	200	183	167
	Lead 20	1200									1167	1000	900	800	700	600	567	533	467	433	400	367	333

※1 When motor with brake assembled on lower side, or the total length over than spec limit, it may not use standard pinhole. Please contact our sales department if you need more information & requirement.
※2 When the stroke is 60mm, if fixing the body from the top to the bottom, the fixing hole will be blocked by slider and only can be uses 4 screws to fix;as a result, suggest that fixing actuator body from the bottom to the top.
※3 The dual-carriage design does not feature an internal synchronous mechanism; the customer can select an external connection to best-fit application requirements.

MSITEC PRODUCTIVITY THROUGH TECHNOLOGY
Visit msitec.com
Call 866-397-7388
Email info@msitec.com

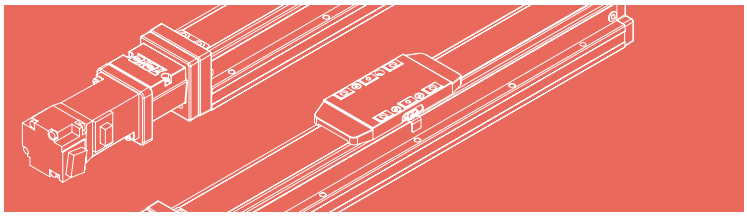

BR Motor Left Side

2D CAD 3D CAD Download CAD data at www.toyorobot.com

Unit : mm

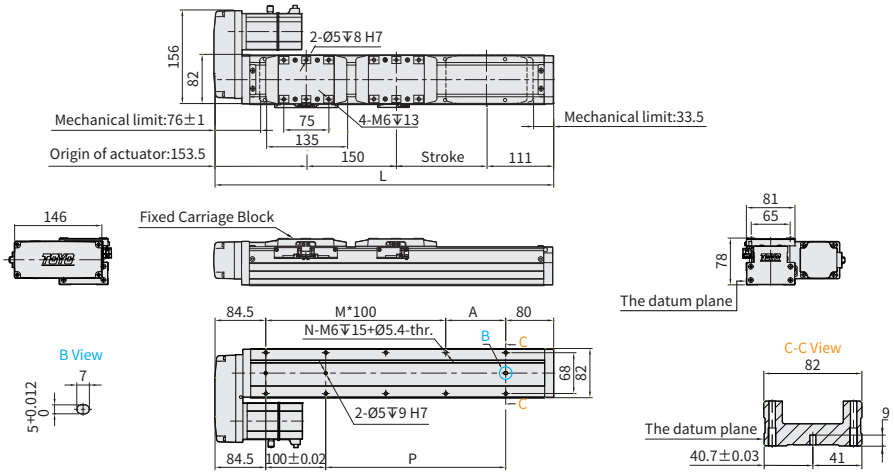

Stroke		50※2	100	150	200	250	300	350	400	450	500	550	600	650	700	750	800	850	900	950	1000	1050	1100
Limit Stroke (±1)		70	120	170	220	270	320	370	420	470	520	570	620	670	720	770	820	870	920	970	1020	1070	1120
L		464.5	514.5	564.5	614.5	664.5	714.5	764.5	814.5	864.5	914.5	964.5	1014.5	1064.5	1114.5	1164.5	1214.5	1264.5	1314.5	1364.5	1414.5	1464.5	1514.5
A		100	50	100	50	100	50	100	50	100	50	100	50	100	50	100	50	100	50	100	50	100	50
M		2	3	3	4	4	5	5	6	6	7	7	8	8	9	9	10	10	11	11	12	12	13
N		8	10	10	12	12	14	14	16	16	18	18	20	20	22	22	24	24	26	26	27	27	28
P		200	250	300	350	400	450	500	550	600	650	700	750	800	850	900	950	1000	1050	1100	1150	1200	1250
KG※1		6.56	6.86	7.19	7.51	7.86	8.15	8.48	8.92	9.22	9.63	9.92	10.16	10.47	10.88	11.13	11.55	11.79	12.21	12.63	13.05	13.47	13.89
Linear Speed mm/s	Lead 5	300									292	250	225	200	175	150	142	133	117	108	100	92	83
	Lead 10	600									583	500	450	400	350	300	283	267	233	217	200	183	167
	Lead 20	1200									1167	1000	900	800	700	600	567	533	467	433	400	367	333

※2 When the stroke is 50mm, if fixing the body from the top to the bottom, the fixing hole will be blocked by slider and only can be uses 4 screws to fix;as a result, suggest that fixing actuator body from the bottom to the top.
※3 The dual-carriage design does not feature an internal synchronous mechanism; the customer can select an external connection to best-fit application requirements.

BL Motor Right Side

2D CAD 3D CAD Download CAD data at www.toyorobot.com

Unit : mm

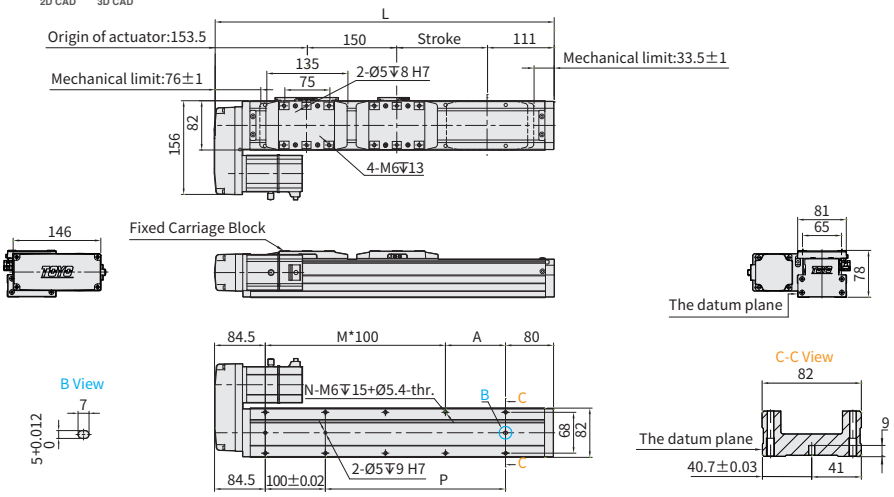

Stroke		50※2	100	150	200	250	300	350	400	450	500	550	600	650	700	750	800	850	900	950	1000	1050	1100
Limit Stroke (±1)		70	120	170	220	270	320	370	420	470	520	570	620	670	720	770	820	870	920	970	1020	1070	1120
L		464.5	514.5	564.5	614.5	664.5	714.5	764.5	814.5	864.5	914.5	964.5	1014.5	1064.5	1114.5	1164.5	1214.5	1264.5	1314.5	1364.5	1414.5	1464.5	1514.5
A		100	50	100	50	100	50	100	50	100	50	100	50	100	50	100	50	100	50	100	50	100	50
M		2	3	3	4	4	5	5	6	6	7	7	8	8	9	9	10	10	11	11	12	12	13
N		8	10	10	12	12	14	14	16	16	18	18	20	20	22	22	24	24	26	26	27	27	28
P		200	250	300	350	400	450	500	550	600	650	700	750	800	850	900	950	1000	1050	1100	1150	1200	1250
KG※1		6.56	6.86	7.19	7.51	7.86	8.15	8.48	8.92	9.22	9.63	9.92	10.16	10.47	10.88	11.13	11.55	11.79	12.21	12.63	13.05	13.47	13.89
Linear Speed mm/s	Lead 5	300									292	250	225	200	175	150	142	133	117	108	100	92	83
	Lead 10	600									583	500	450	400	350	300	283	267	233	217	200	183	167
	Lead 20	1200									1167	1000	900	800	700	600	567	533	467	433	400	367	333

※2 When the stroke is 50mm, if fixing the body from the top to the bottom, the fixing hole will be blocked by slider and only can be uses 4 screws to fix;as a result, suggest that fixing actuator body from the bottom to the top.
※3 The dual-carriage design does not feature an internal synchronous mechanism; the customer can select an external connection to best-fit application requirements.

GTH8D

▶ Integrated Linear Bearing ▶ Ball Screw Drive

The picture is just for the reference. Please check the the actual dimensions on the drawing.

Ordering Method

GTH8D - L10 - 100 - BC - X - C4 - 0001

Model | Special Order No.

Ballscrew Accuracy Grade

L	Rolled Ballscrews
C	Ground Ballscrews

*C precision-level ground ball screws are not available in all stroke lengths, please consult the model datasheet.

Stroke

Rolled Ballscrews
50-1100mm(50mm increments)
Ground Ballscrews
50-550mm(50mm increments)

Ball Screw Lead

5	5mm
10	10mm
20	20mm

Motor Position

BC	Motor Exposed
BM	Motor Bottom Side
BL	Motor Left Side
BR	Motor Right Side
-*2	No Motor Position

Motor Flange、Power Output

With Motor Flange & Coupling				
M	Mitsubishi	05	-	B
P	Panasonic	10	-	
Y	Yaskawa	20	-	
T	Delta	40	400W	
X	Others*1			
Without Motor Flange & Coupling				
K	No Motor Flange & Coupling*2			

*1 When choosing non-standard motor X, the motor spec must be provided and confirmed by TOYO for installation before the order is established.

*2 When K is selected, the motor position need no description.

Home Sensor

Outside	
C	Motor Side
D	Opposite Motor Side
No Sensor	
E	No Sensor

*When the stroke is 50mm, the sensor installation has the following restrictions:

1.The home sensor and the limit sensor must be installed on different sides of the body.

2.The sensor trigger device must be installed on both sides of the device.

Limit Sensor

Outside	
3	1 Pc
4	2 Pc
No Sensor	
5	No Sensor

MSITEC PRODUCTIVITY THROUGH TECHNOLOGY
Visit msitec.com
Call 866-397-7388
Email info@msitec.com

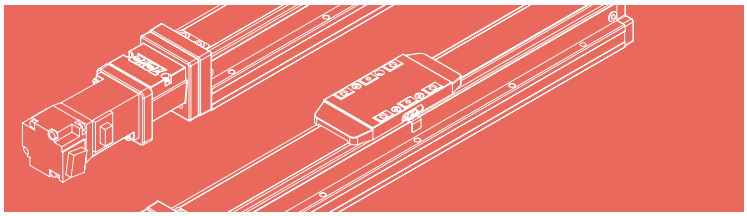

Specification

Item	Ball Screw Spec.	Ballscrew Accuracy Grade Code		L	C
		Ballscrew Accuracy Grade		C7 Rolled Ballscrews	C5 Ground Ballscrews
		Repeatability	mm	±0.005	±0.003
		Stroke (increments)	mm	50-1100mm (50 increments)	50-700mm (50 increments)

Item	Ball screw	Outer dia. & Precision grade	mm	Ø16 & C7		
		Lead	mm	5	10	20
		Maximum Rotating speed	rpm	3600	3600	3600
		Maximum linear speed ※1	mm/s	300	600	1200
		Basic dynamic load rating Ca	N	8042	6300	4152
		Basic static load rating Coa	N	15088	11596	7439
		Load factor		1.2	1.35	1.35
	Linear Guide	Dynamic horizontal – 100 Km of travel	kgf	3076		
		Dynamic horizontal – 1000 Km of travel	kgf	1428		
		Dynamic horizontal – 10000 Km of travel	kgf	663		
		Static horizontal	kg	5655		
	Fixed bearing	Basic dynamic load rating Cr	N	2600		
		Static load rating Cor	N	4750		
	Common Spec	Start torpue	N.cm	10		
		Allowable input torque	N.m	2.2		
		Maximum acceleration	m/s^2	10		
		Friction coefficient		0.03		
		Ambient temperature ※2	°C	0~+40		

※1 Estimated max speed and max payload when using a standard 100W servo motor.
(Confirm max speed and payload at the same time.)

※2 Customized temperature:-20°C~ 80°C. special grease requirement need to follow customization process.

Static Loading Moment

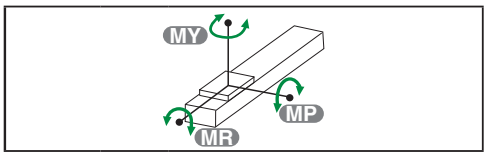

MY	N.m	1011
MP	N.m	2565
MR	N.m	2565

Dynamic Loading Moment

Travel	km	100	1000	10000
MY	N.m	487.6	226.3	105.0
MP	N.m	487.6	226.3	105.0
MR	N.m	327.0	151.8	70.4

Parts list

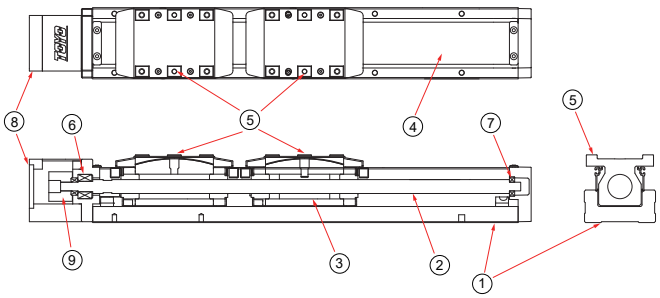

No.	Part Description	Material
1	Housing	AL6463
2	Ball Screw	S45C
3	Ball Screw Nut	S45C
4	Steel Band	SUS430
5	Carriage	SNCM21H
6	Ball Bearing Dual Arrangement	SUJ2
7	Ball Bearing	SUJ2
8	Fixed Support Block-Inline Motor Mounting Bracket	AL6061
9	Coupling- Clamping	AL6061

GTH8D

▶ Integrated Linear Bearing ▶ Ball Screw Drive

BC Motor Exposed

2D CAD 3D CAD Download CAD data at www.toyorobot.com

Unit : mm

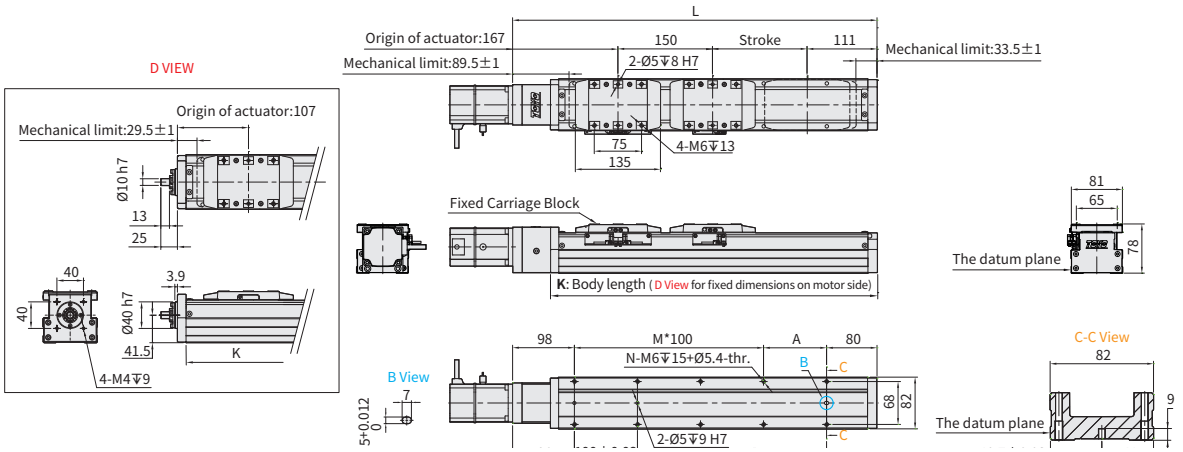

Stroke	50※2	100	150	200	250	300	350	400	450	500	550	600	650	700	750	800	850	900	950	1000	1050	1100
Limit Stroke (±1)	70	120	170	220	270	320	370	420	470	520	570	620	670	720	770	820	870	920	970	1020	1070	1120
L	478	528	578	628	678	728	778	828	878	928	978	1028	1078	1128	1178	1228	1278	1328	1378	1428	1478	1528
A	100	50	100	50	100	50	100	50	100	50	100	50	100	50	100	50	100	50	100	50	100	50
M	2	3	3	4	4	5	5	6	6	7	7	8	8	9	9	10	10	11	11	12	12	13
N	8	10	10	12	12	14	14	16	16	18	18	20	20	22	22	24	24	26	26	27	27	28
P	200	250	300	350	400	450	500	550	600	650	700	750	800	850	900	950	1000	1050	1100	1150	1200	1250
KG※1	6. 47	6. 82	7. 15	7. 47	7. 82	8. 11	8. 44	8. 88	9. 18	9. 59	9. 88	10. 12	10. 43	10. 84	11. 09	11. 48	11. 75	12. 17	12. 59	13. 01	13. 43	13. 85
K	418	468	518	568	618	668	718	768	818	868	918	968	1018	1068	1118	1168	1218	1268	1318	1368	1418	1468
Linear Speed mm/s — Lead 5	300									292	250	225	200	175	150	142	133	117	108	100	92	83
Linear Speed mm/s — Lead 10	600									583	500	450	40	350	300	283	267	233	217	200	183	167
Linear Speed mm/s — Lead 20	1200									1167	1000	900	800	700	600	567	533	467	433	400	367	333

※1 KG refers to the weight with motor related accessories (excluding motor), not corresponding to K Type.
※2 When the stroke is 50mm, if fixing the body from the top to the bottom, the fixing hole will be blocked by slider and only can be uses 4 screws to fix;as a result, suggest that fixing actuator body from the bottom to the top.
※3 The dual-carriage design does not feature an internal synchronous mechanism; the customer can select an external connection to best-fit application requirements.

BM Motor Bottom Side

2D CAD 3D CAD Download CAD data at www.toyorobot.com

Unit : mm

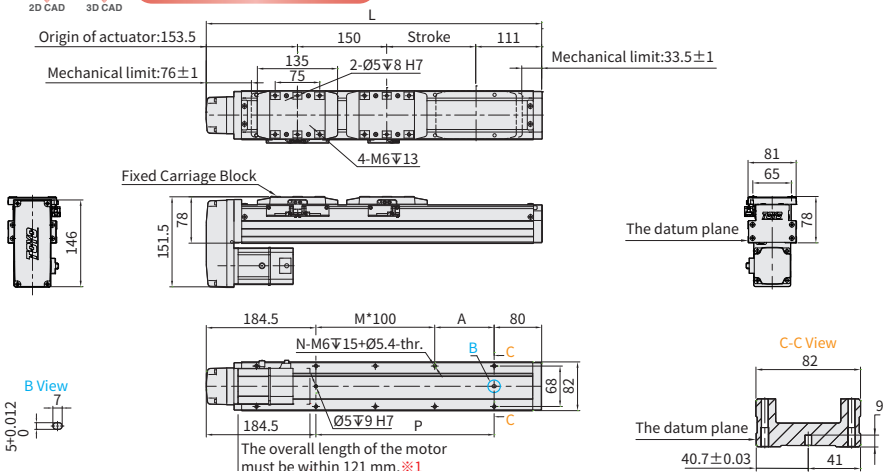

Stroke	50※2	100	150	200	250	300	350	400	450	500	550	600	650	700	750	800	850	900	950	1000	1050	1100
Limit Stroke (±1)	70	120	170	220	270	320	370	420	470	520	570	620	670	720	770	820	870	920	970	1020	1070	1120
L	464. 5	514. 5	564. 5	614. 5	664. 5	714. 5	764. 5	814. 5	864. 5	914. 5	964. 5	1014. 5	1064. 5	1114. 5	1164. 5	1214. 5	1264. 5	1314. 5	1364. 5	1414. 5	1464. 5	1514. 5
A	100	50	100	50	100	50	100	50	100	50	100	50	100	50	100	50	100	50	100	50	100	50
M	1	2	2	3	3	4	4	5	5	6	6	7	7	8	8	9	9	10	10	11	11	12
N	6	8	8	10	10	12	12	14	14	16	16	18	18	20	20	22	22	24	24	26	26	27
P	200	250	300	350	400	450	500	550	600	650	700	750	800	850	900	950	1000	1050	1100	1150	1200	1250
KG※1	6. 56	6. 86	7. 19	7. 51	7. 86	8. 15	8. 48	8. 92	9. 22	9. 63	9. 92	10. 16	10. 47	10. 88	11. 13	11. 55	11. 79	12. 21	12. 63	13. 05	13. 47	13. 89
Linear Speed mm/s — Lead 5	300									292	250	225	200	175	150	142	133	117	108	100	92	83
Linear Speed mm/s — Lead 10	600									583	500	450	400	350	300	283	267	233	217	200	183	167
Linear Speed mm/s — Lead 20	1200									1167	1000	900	800	700	600	567	533	467	433	400	367	333

※1 When motor with brake assembled on lower side, or the total length over than spec limit, it may not use standard pinhole. Please contact our sales department if you need more information & requirement.
※2 When the stroke is 60mm, if fixing the body from the top to the bottom, the fixing hole will be blocked by slider and only can be uses 4 screws to fix;as a result, suggest that fixing actuator body from the bottom to the top.
※3 The dual-carriage design does not feature an internal synchronous mechanism; the customer can select an external connection to best-fit application requirements.

MSITEC PRODUCTIVITY THROUGH TECHNOLOGY
Visit msitec.com
Call 866-397-7388
Email info@msitec.com

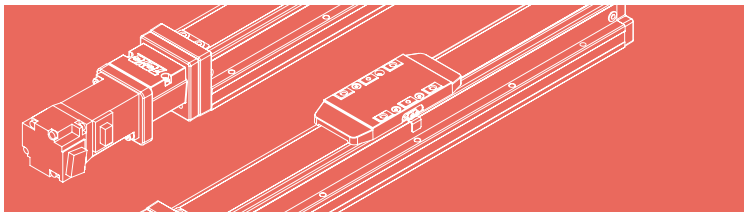

BR Motor Left Side

2D CAD 3D CAD Download CAD data at www.toyorobot.com

Unit : mm

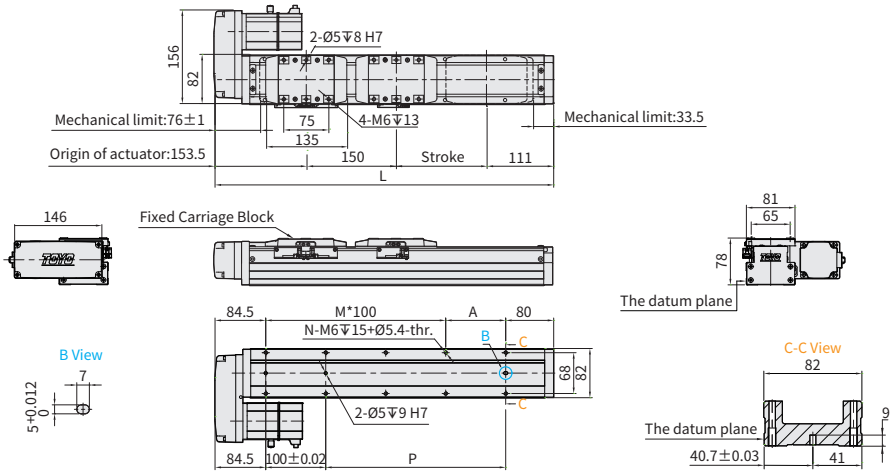

Stroke		50※2	100	150	200	250	300	350	400	450	500	550	600	650	700	750	800	850	900	950	1000	1050	1100
Limit Stroke (±1)		70	120	170	220	270	320	370	420	470	520	570	620	670	720	770	820	870	920	970	1020	1070	1120
L		464.5	514.5	564.5	614.5	664.5	714.5	764.5	814.5	864.5	914.5	964.5	1014.5	1064.5	1114.5	1164.5	1214.5	1264.5	1314.5	1364.5	1414.5	1464.5	1514.5
A		100	50	100	50	100	50	100	50	100	50	100	50	100	50	100	50	100	50	100	50	100	50
M		2	3	3	4	4	5	5	6	6	7	7	8	8	9	9	10	10	11	11	12	12	13
N		8	10	10	12	12	14	14	16	16	18	18	20	20	22	22	24	24	26	26	27	27	28
P		200	250	300	350	400	450	500	550	600	650	700	750	800	850	900	950	1000	1050	1100	1150	1200	1250
KG※1		6.56	6.86	7.19	7.51	7.86	8.15	8.48	8.92	9.22	9.63	9.92	10.16	10.47	10.88	11.13	11.55	11.79	12.21	12.63	13.05	13.47	13.89
Linear Speed mm/s	Lead 5	300									292	250	225	200	175	150	142	133	117	108	100	92	83
	Lead 10	600									583	500	450	400	350	300	283	267	233	217	200	183	167
	Lead 20	1200									1167	1000	900	800	700	600	567	533	467	433	400	367	333

※2 When the stroke is 50mm, if fixing the body from the top to the bottom, the fixing hole will be blocked by slider and only can be uses 4 screws to fix;as a result, suggest that fixing actuator body from the bottom to the top.
※3 The dual-carriage design does not feature an internal synchronous mechanism; the customer can select an external connection to best-fit application requirements.

BL Motor Right Side

2D CAD 3D CAD Download CAD data at www.toyorobot.com

Unit : mm

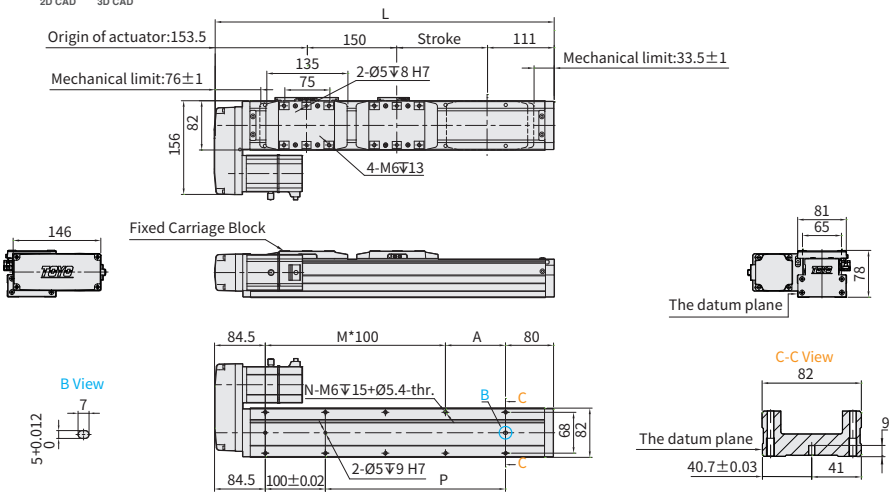

Stroke		50※2	100	150	200	250	300	350	400	450	500	550	600	650	700	750	800	850	900	950	1000	1050	1100
Limit Stroke (±1)		70	120	170	220	270	320	370	420	470	520	570	620	670	720	770	820	870	920	970	1020	1070	1120
L		464.5	514.5	564.5	614.5	664.5	714.5	764.5	814.5	864.5	914.5	964.5	1014.5	1064.5	1114.5	1164.5	1214.5	1264.5	1314.5	1364.5	1414.5	1464.5	1514.5
A		100	50	100	50	100	50	100	50	100	50	100	50	100	50	100	50	100	50	100	50	100	50
M		2	3	3	4	4	5	5	6	6	7	7	8	8	9	9	10	10	11	11	12	12	13
N		8	10	10	12	12	14	14	16	16	18	18	20	20	22	22	24	24	26	26	27	27	28
P		200	250	300	350	400	450	500	550	600	650	700	750	800	850	900	950	1000	1050	1100	1150	1200	1250
KG※1		6.56	6.86	7.19	7.51	7.86	8.15	8.48	8.92	9.22	9.63	9.92	10.16	10.47	10.88	11.13	11.55	11.79	12.21	12.63	13.05	13.47	13.89
Linear Speed mm/s	Lead 5	300									292	250	225	200	175	150	142	133	117	108	100	92	83
	Lead 10	600									583	500	450	400	350	300	283	267	233	217	200	183	167
	Lead 20	1200									1167	1000	900	800	700	600	567	533	467	433	400	367	333

※2 When the stroke is 50mm, if fixing the body from the top to the bottom, the fixing hole will be blocked by slider and only can be uses 4 screws to fix;as a result, suggest that fixing actuator body from the bottom to the top.
※3 The dual-carriage design does not feature an internal synchronous mechanism; the customer can select an external connection to best-fit application requirements.

GTH12D ▶ Integrated Linear Bearing ▶ Ball Screw Drive

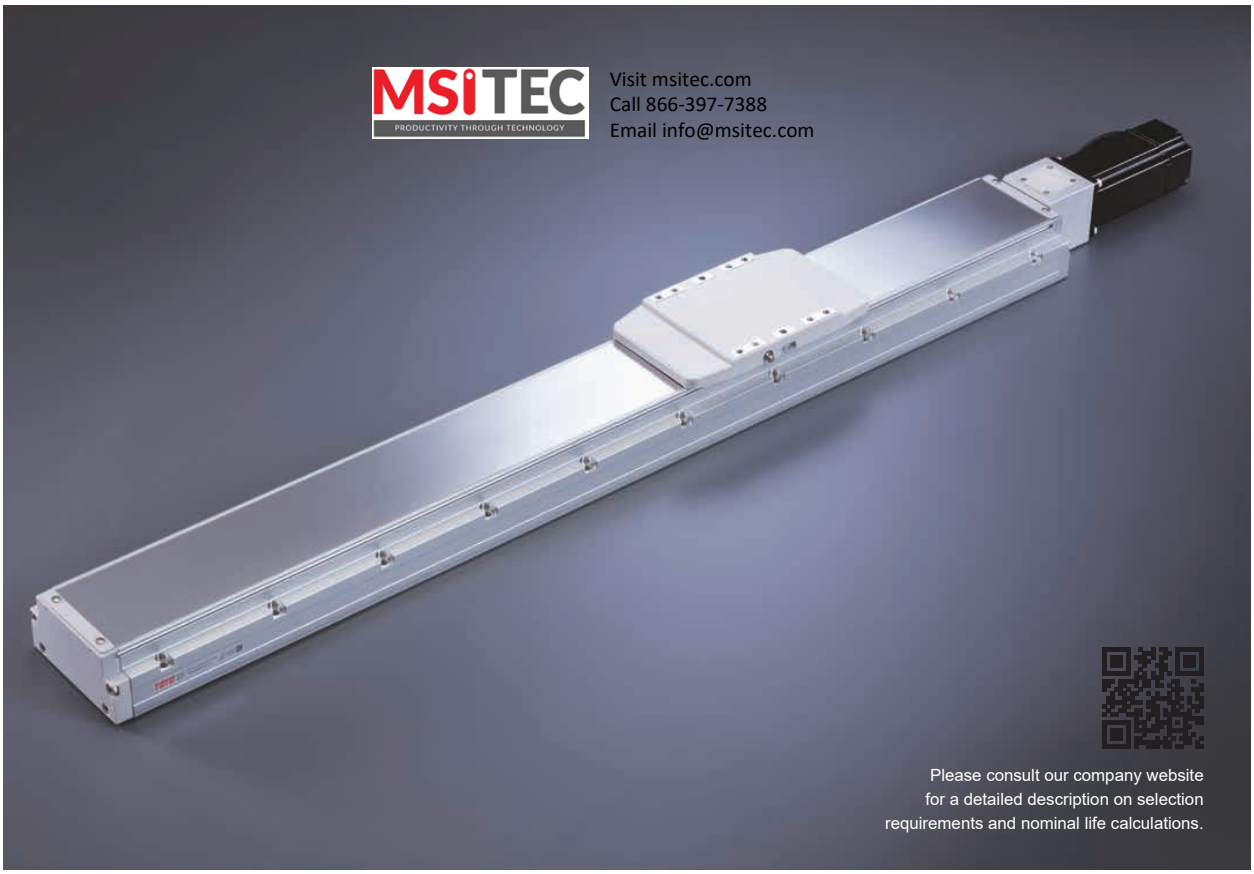

The picture is just for the reference. Please check the the actual dimensions on the drawing.

Ordering Method

GTH12D - L5 - 240 - BC - X - C4 - 0001

Model | **Special Order No.**

Ballscrew Accuracy Grade

L	Rolled Ballscrews
C	Ground Ballscrews

*C precision-level ground ball screws are not available in all stroke lengths, please consult the model datasheet.

Stroke

Rolled Ballscrews
40-1040mm(50mm increments)
Ground Ballscrews
40-490mm(50mm increments)

Ball Screw Lead

5	5mm
10	10mm
20	20mm
32	32mm

Motor Position

BC	Motor Exposed
BM	Motor Bottom Side
BL	Motor Left Side
BR	Motor Right Side
-*2	No Motor Position

Motor Flange、Power Output

With Motor Flange & Coupling				
M	Mitsubishi	05	-	B
P	Panasonic	10	-	
Y	Yaskawa	20	-	
T	Delta	40	400W	
X	Others*1			
Without Motor Flange & Coupling				
K	No Motor Flange & Coupling*2			

*1 When choosing non-standard motor X, the motor spec must be provided and confirmed by TOYO for installation before the order is established.

*2 When K is selected, the motor position need no description.

Home Sensor

Outside	
C	Motor Side
D	Opposite Motor Side
No Sensor	
E	No Sensor

*When the stroke is 50mm, the sensor installation has the following restrictions:

1.The home sensor and the limit sensor must be installed on different sides of the body.

2.The sensor trigger device must be installed on both sides of the device.

Limit Sensor

Outside	
3	1 Pc
4	2 Pc
No Sensor	
5	No Sensor

MSiTEC PRODUCTIVITY THROUGH TECHNOLOGY
Visit msitec.com
Call 866-397-7388
Email info@msitec.com

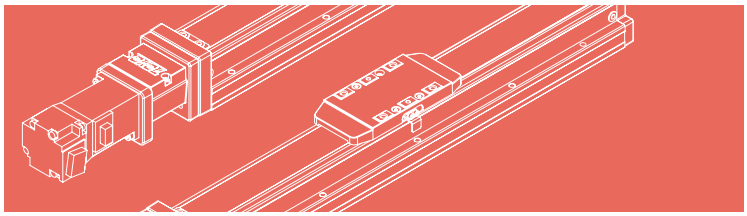

Specification

Item	Ball Screw Spec.	Ballscrew Accuracy Grade Code			L		C
		Ballscrew Accuracy Grade			C7 Rolled Ballscrews		C5 Ground Ballscrews
		Repeatability		mm	±0.005		±0.003
		Stroke (increments)		mm	40-1040mm (50 increments)		50-700mm (50 increments)

Item	Ball screw	Outer dia. & Precision grade		mm	Ø16 & C7			
		Lead		mm	5	10	20	32
		Maximum Rotating speed		rpm	3600	3600	3600	3600
		Maximum linear speed ※1		mm/s	300	600	1200	1920
		Basic dynamic load rating Ca		N	11570	6300	4152	7326
		Basic static load rating Coa		N	23030	11596	7439	14157
		Load factor			1.2	1.35	1.35	1.75
	Linear Guide	Dynamic horizontal	100 Km of travel	kgf	9136			
			1000 Km of travel	kgf	4241			
			10000 Km of travel	kgf	1968			
		Static horizontal		kg	15707			
	Fixed bearing	Basic dynamic load rating Cr		N	2600			
		Static load rating Cor		N	4750			
	Common Spec	Start torpue		N.cm	10			
		Allowable input torque		N.m	3.1			
		Maximum acceleration		m/s^2	10			
		Friction coefficient			0.03			
		Ambient temperature ※2		°C	0~+40			

※1 Estimated max speed and max payload when using a standard 100W servo motor.
(Confirm max speed and payload at the same time.)

※2 Customized temperature:-20°C~ 80°C. special grease requirement need to follow customization process.

Static Loading Moment

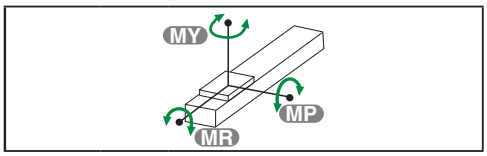

MY	N.m	1898
MP	N.m	4043
MR	N.m	4043

Dynamic Loading Moment

Travel	km	100	1000	10000
MY	N.m	2027.4	941.0	436.8
MP	N.m	2027.4	941.0	436.8
MR	N.m	1679.9	779.7	361.9

Parts list

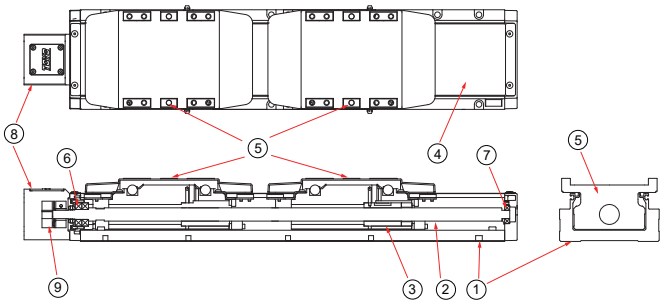

No.	Part Description	Material
1	Housing	AL6463
2	Ball Screw	S45C
3	Ball Screw Nut	S45C
4	Steel Band	SUS430
5	Carriage	SNCM21H
6	Ball Bearing Dual Arrangement	SUJ2
7	Ball Bearing	SUJ2
8	Fixed Support Block-Inline Motor Mounting Bracket	AL6061
9	Coupling- Clamping	AL6061

GTH12D ▶ Integrated Linear Bearing ▶ Ball Screw Drive

BC Motor Exposed

2D CAD 3D CAD Download CAD data at www.toyorobot.com

Unit : mm

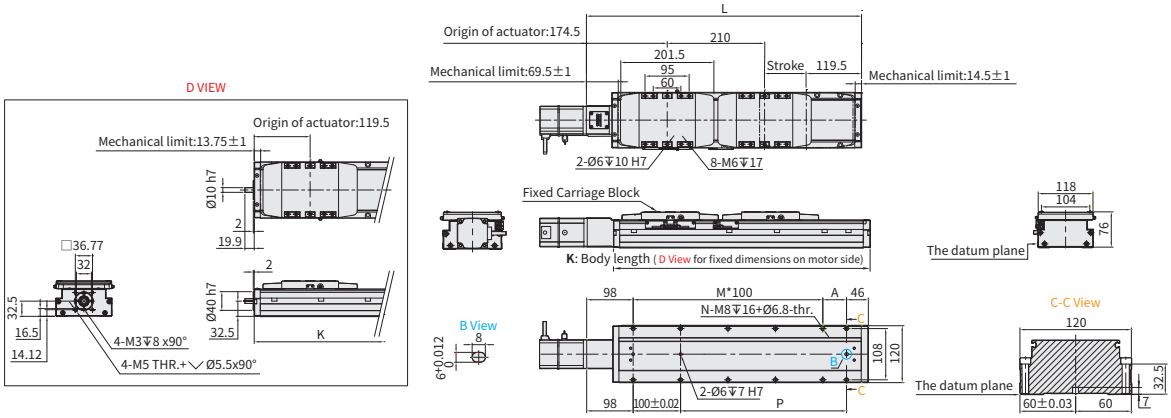

Stroke		40※2	90※2	140	190	240	290	340	390	440	490	540	590	640	690	740	790	840	890	940	990	1040
Limit Stroke (±1)		48.5	98.5	148.5	198.5	248.5	298.5	348.5	398.5	448.5	498.5	548.5	598.5	648.5	698.5	748.5	798.5	848.5	898.5	948.5	998.5	1048.5
L		544	594	644	694	744	794	844	894	944	994	1044	1094	1144	1194	1244	1294	1344	1394	1444	1494	1544
A		100	50	100	50	100	50	100	50	100	50	100	50	100	50	100	50	100	50	100	50	100
M		3	4	4	5	5	6	6	7	7	8	8	9	9	10	10	11	11	12	12	13	13
N		10	12	12	14	14	16	16	18	18	20	20	22	22	24	24	26	26	28	28	30	30
P		300	350	400	450	500	550	600	650	700	750	800	850	900	950	1000	1050	1100	1150	1200	1250	1300
KG※1		8.1	8.45	8.8	9.15	9.5	9.85	10.2	10.55	10.9	11.25	11.6	11.95	12.3	12.65	13	13.35	13.7	14.05	14.4	14.75	15.1
K		489	539	589	639	689	739	789	839	889	939	989	1039	1089	1139	1189	1239	1289	1339	1389	1439	1489
Linear Speed mm/s	Lead 5	300								250				225	200	175	167	158	142	133	125	117
	Lead 10	600								500				450	400	350	333	317	283	267	250	233
	Lead 20	1200								1000				900	800	700	667	633	567	533	500	467
	Lead 32	1920								1600				1440	1280	1120	1067	1013	907	853	800	747

※1 KG refers to the weight with motor related accessories (excluding motor), not corresponding to K Type.
※2 When the stroke is 40mm, if fixing the body from the top to the bottom, the fixing hole will be blocked by slider and only can be uses 4 screws to fix;as a result, suggest that fixing actuator body from the bottom to the top.
※3 The dual-carriage design does not feature an internal synchronous mechanism; the customer can select an external connection to best-fit application requirements.

BM Motor Bottom Side

2D CAD 3D CAD Download CAD data at www.toyorobot.com

Unit : mm

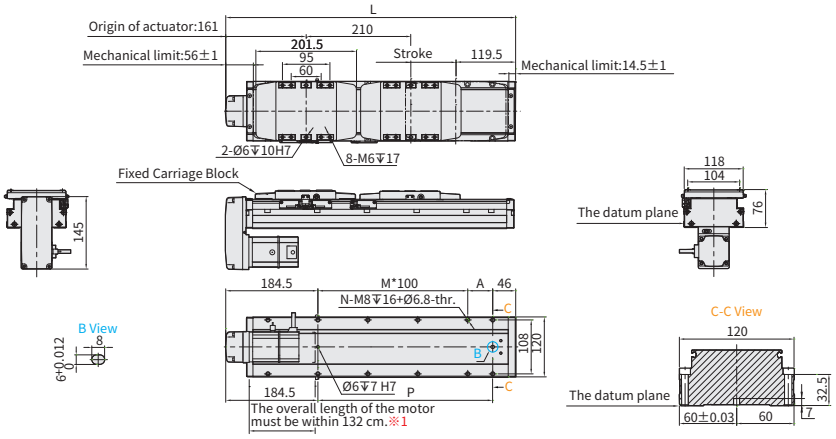

Stroke		40※2	90※2	140	190	240	290	340	390	440	490	540	590	640	690	740	790	840	890	940	990	1040
Limit Stroke (±1)		48.5	98.5	148.5	198.5	248.5	298.5	348.5	398.5	448.5	498.5	548.5	598.5	648.5	698.5	748.5	798.5	848.5	898.5	948.5	998.5	1048.5
L		530.5	580.5	630.5	680.5	730.5	780.5	830.5	880.5	930.5	980.5	1030.5	1080.5	1130.5	1180.5	1230.5	1280.5	1330.5	1380.5	1430.5	1480.5	1530.5
A		100	50	100	50	100	50	100	50	100	50	100	50	100	50	100	50	100	50	100	50	100
M		2	3	3	4	4	5	5	6	6	7	7	8	8	9	9	10	10	11	11	12	12
N		8	10	10	12	12	14	14	16	16	18	18	20	20	22	22	24	24	26	26	28	28
P		300	350	400	450	500	550	600	650	700	750	800	850	900	950	1000	1050	1100	1150	1200	1250	1300
KG		8.26	8.61	8.96	9.31	9.66	10.01	10.36	10.71	11.06	11.41	11.76	12.11	12.46	12.81	13.16	13.51	13.86	14.21	14.56	14.91	15.26
Linear Speed mm/s	Lead 5	300								250				225	200	175	167	158	142	133	125	117
	Lead 10	600								500				450	400	350	333	317	283	267	250	233
	Lead 20	1200								1000				900	800	700	667	633	567	533	500	467
	Lead 32	1920								1600				1440	1280	1120	1067	1013	907	853	800	747

※1 When motor with brake assembled on lower side, or the total length over than spec limit, it may not use standard pinhole. Please contact our sales department if you need more information & requirement.
※2 When the stroke is 40mm, if fixing the body from the top to the bottom, the fixing hole will be blocked by slider and only can be uses 4 screws to fix;as a result, suggest that fixing actuator body from the bottom to the top.
※3 The dual-carriage design does not feature an internal synchronous mechanism; the customer can select an external connection to best-fit application requirements.

MSITEC PRODUCTIVITY THROUGH TECHNOLOGY
Visit msitec.com
Call 866-397-7388
Email info@msitec.com

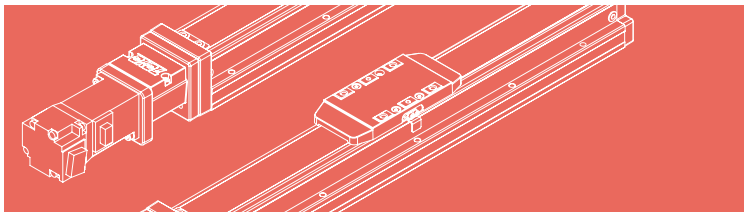

BR Motor Left Side

2D CAD 3D CAD Download CAD data at www.toyorobot.com

Unit : mm

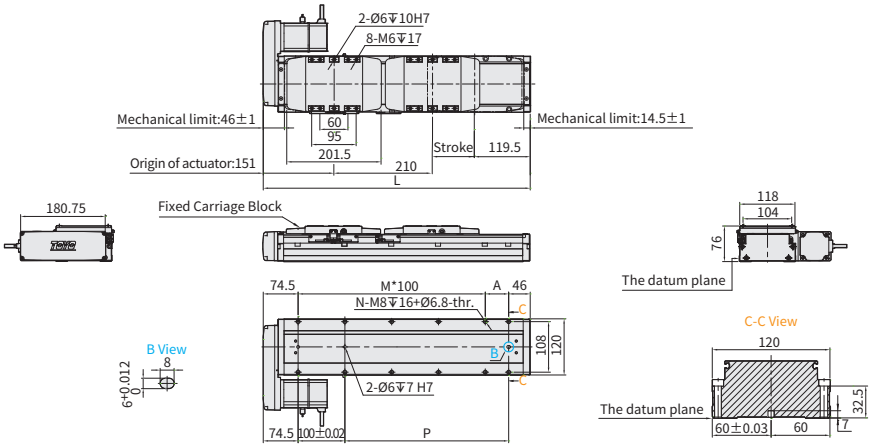

Stroke		40※2	90※2	140	190	240	290	340	390	440	490	540	590	640	690	740	790	840	890	940	990	1040
Limit Stroke (±1)		48.5	98.5	148.5	198.5	248.5	298.5	348.5	398.5	448.5	498.5	548.5	598.5	648.5	698.5	748.5	798.5	848.5	898.5	948.5	998.5	1048.5
L		520.5	570.5	620.5	670.5	720.5	770.5	820.5	870.5	920.5	970.5	1020.5	1070.5	1120.5	1170.5	1220.5	1270.5	1320.5	1370.5	1420.5	1470.5	1520.5
A		100	50	100	50	100	50	100	50	100	50	100	50	100	50	100	50	100	50	100	50	100
M		3	4	4	5	5	6	6	7	7	8	8	9	9	10	10	11	11	12	12	13	13
N		10	12	12	14	14	16	16	18	18	20	20	22	22	24	24	26	26	28	28	30	30
P		300	350	400	450	500	550	600	650	700	750	800	850	900	950	1000	1050	1100	1150	1200	1250	1300
KG		8.3	8.65	9	9.35	9.7	10.05	10.4	10.75	11.1	11.45	11.8	12.5	12.85	13.2	13.55	13.9	14.25	14.21	14.56	14.91	15.26
Linear Speed mm/s	Lead 5	300								250				225	200	175	167	158	142	133	125	117
	Lead 10	600								500				450	400	350	333	317	283	267	250	233
	Lead 20	1200								1000				900	800	700	667	633	567	533	500	467
	Lead 32	1920								1600				1440	1280	1120	1067	1013	907	853	800	747

※2 When the stroke is 40mm, if fixing the body from the top to the bottom, the fixing hole will be blocked by slider and only can be uses 4 screws to fix;as a result, suggest that fixing actuator body from the bottom to the top.
※3 The dual-carriage design does not feature an internal synchronous mechanism; the customer can select an external connection to best-fit application requirements.

BL Motor Right Side

2D CAD 3D CAD Download CAD data at www.toyorobot.com

Unit : mm

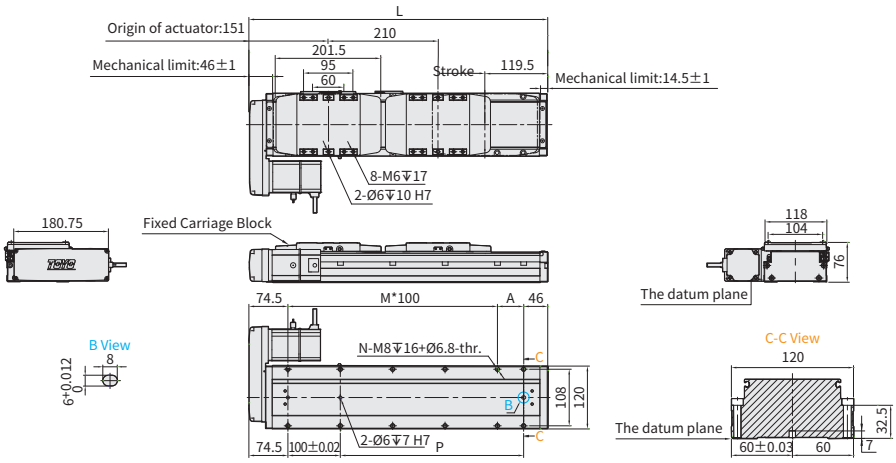

Stroke		40※2	90※2	140	190	240	290	340	390	440	490	540	590	640	690	740	790	840	890	940	990	1040
Limit Stroke (±1)		48.5	98.5	148.5	198.5	248.5	298.5	348.5	398.5	448.5	498.5	548.5	598.5	648.5	698.5	748.5	798.5	848.5	898.5	948.5	998.5	1048.5
L		520.5	570.5	620.5	670.5	720.5	770.5	820.5	870.5	920.5	970.5	1020.5	1070.5	1120.5	1170.5	1220.5	1270.5	1320.5	1370.5	1420.5	1470.5	1520.5
A		100	50	100	50	100	50	100	50	100	50	100	50	100	50	100	50	100	50	100	50	100
M		3	4	4	5	5	6	6	7	7	8	8	9	9	10	10	11	11	12	12	13	13
N		10	12	12	14	14	16	16	18	18	20	20	22	22	24	24	26	26	28	28	30	30
P		300	350	400	450	500	550	600	650	700	750	800	850	900	950	1000	1050	1100	1150	1200	1250	1300
KG		8.3	8.65	9	9.35	9.7	10.05	10.4	10.75	11.1	11.45	11.8	12.5	12.85	13.2	13.55	13.9	14.25	14.21	14.56	14.91	15.26
Linear Speed mm/s	Lead 5	300								250				225	200	175	167	158	142	133	125	117
	Lead 10	600								500				450	400	350	333	317	283	267	250	233
	Lead 20	1200								1000				900	800	700	667	633	567	533	500	467
	Lead 32	1920								1600				1440	1280	1120	1067	1013	907	853	800	747

※2 When the stroke is 40mm, if fixing the body from the top to the bottom, the fixing hole will be blocked by slider and only can be uses 4 screws to fix;as a result, suggest that fixing actuator body from the bottom to the top.
※3 The dual-carriage design does not feature an internal synchronous mechanism; the customer can select an external connection to best-fit application requirements.

GTH3K

▶ Integrated Linear Bearing ▶ Ball Screw Drive

The picture is just for the reference. Please check the the actual dimensions on the drawing.

Ordering Method

GTH3K - L2 - 100 - BC - X - C4 - 0001

Model | **Special Order No.**

Stroke

50-300mm
50mm increments

Ball Screw Lead

2	2mm
8	8mm

Motor Position

BC	Motor Exposed
BM	Motor Bottom Side
BL	Motor Left Side
BR	Motor Right Side
-*2	No Motor Position

Motor Flange、Power Output

With Motor Flange & Coupling				
M	Mitsubishi	03	30W	B
		05	-	
Y	Yaskawa	10	-	
		20	-	
		40	-	
X	Others*1			
Without Motor Flange & Coupling				
K	No Motor Flange & Coupling*2			

*1 When choosing non-standard motor X, the motor spec must be provided and confirmed by TOYO for installation before the order is established.

*2 When K is selected, the motor position need no description.

Home Sensor

Outside	
C	Motor Side
D	Opposite Motor Side
No Sensor	
E	No Sensor

Limit Sensor

Outside	
3	1 Pc
4	2 Pc
No Sensor	
5	No Sensor

*When the stroke is 50mm, the sensor installation has the following restrictions:

1.The home sensor and the limit sensor must be installed on different sides of the body.

2.The sensor trigger device must be installed on both sides of the device.

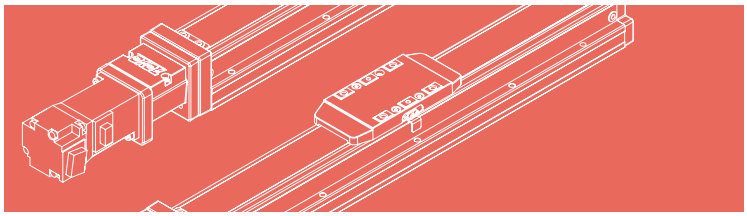

Specification

Item						
Ball screw	Outer dia. & Precision grade			mm	Ø6 & C7	
	Lead			mm	2	8
	Maximum Rotating speed			rpm	3000	3600
	Maximum linear speed ※1			mm/s	100	480
	Basic dynamic load rating Ca			N	1811	862
	Basic static load rating Coa			N	2774	1099
	Load factor				1.2	1.35
Linear Guide	Dynamic horizontal	100 Km of travel		kgf	321	
		1000 Km of travel		kgf	149	
		10000 Km of travel		kgf	69	
	Static horizontal			kg	684	
Fixed bearing	Basic dynamic load rating Cr			N	1470	
	Static load rating Cor			N	535	
Common Spec	Repeatability			mm	±0.005	
	Start torpue			N.cm	2	
	Allowable input torque			N.m	1.1	
	Maximum acceleration			m/s^2	10	
	Friction coefficient				0.03	
	Stroke interval			mm	50-300 (50 increments)	
	Ambient temperature ※2			°C	0~+40	

※1 Estimated max speed and max payload when using a standard 100W servo motor.
(Confirm max speed and payload at the same time.)

※2 Customized temperature:-20°C~ 80°C. special grease requirement need to follow customization process.

Static Loading Moment

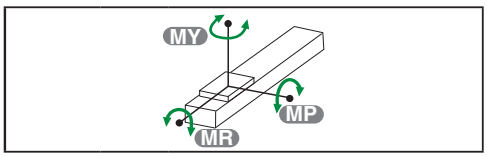

MY	N.m	39
MP	N.m	39
MR	N.m	44

Dynamic Loading Moment

Travel	km	100	1000	10000
MY	N.m	9.6	4.5	2.1
MP	N.m	9.6	4.5	2.1
MR	N.m	10.8	5.0	2.3

Parts list

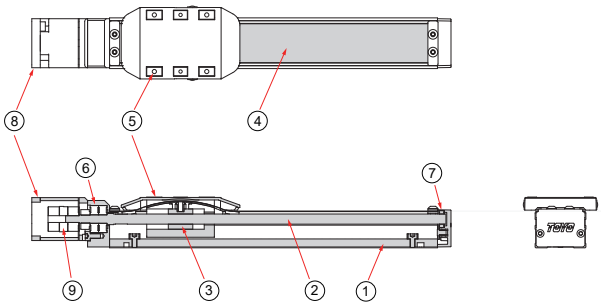

No.	Part Description	Material
1	Housing	AL6463
2	Ball Screw	S45C
3	Ball Screw Nut	S45C
4	Steel Band	SUS430
5	Carriage	SNCM21H
6	Ball Bearing Dual Arrangement	SUJ2
7	Ball Bearing	SUJ2
8	Fixed Support Block-Inline Motor Mounting Bracket	AL6061
9	Coupling- Clamping	AL6061

BC Motor Exposed

2D CAD 3D CAD Download CAD data at www.toyorobot.com

Unit : mm

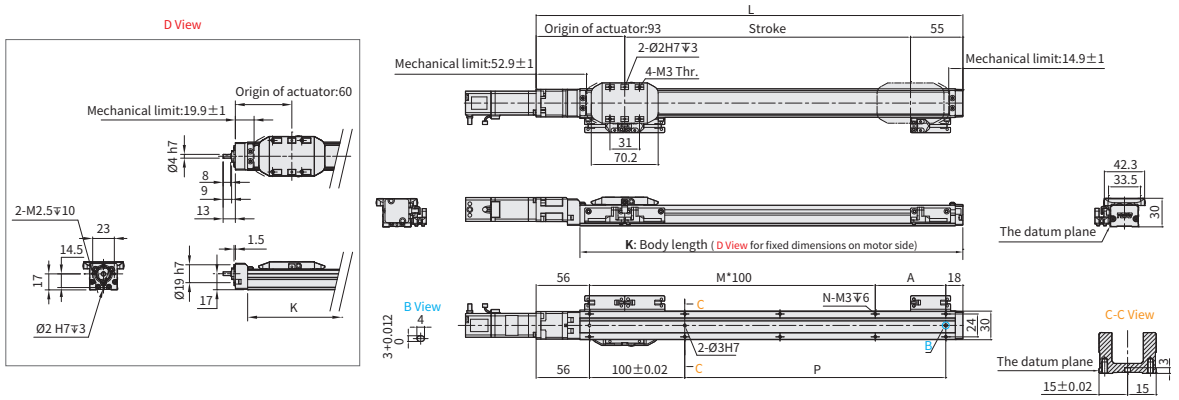

Stroke		50	100	150	200	250	300
Limit Stroke (±1)		60	110	160	210	260	310
L		198	248	298	348	398	448
A		24	74	24	74	24	74
M		1	1	2	2	3	3
N		6	6	8	8	10	10
P		24	74	124	174	224	274
KG※1		0. 76	0. 95	1. 13	1. 32	1. 5	1. 68
K		165	215	265	315	365	415
Linear Speed mm/s	Lead 2	100					
	Lead 8	480					

※1 KG refers to the weight with motor related accessories (excluding motor), not corresponding to K Type.

BM Motor Bottom Side

2D CAD 3D CAD Download CAD data at www.toyorobot.com

Unit : mm

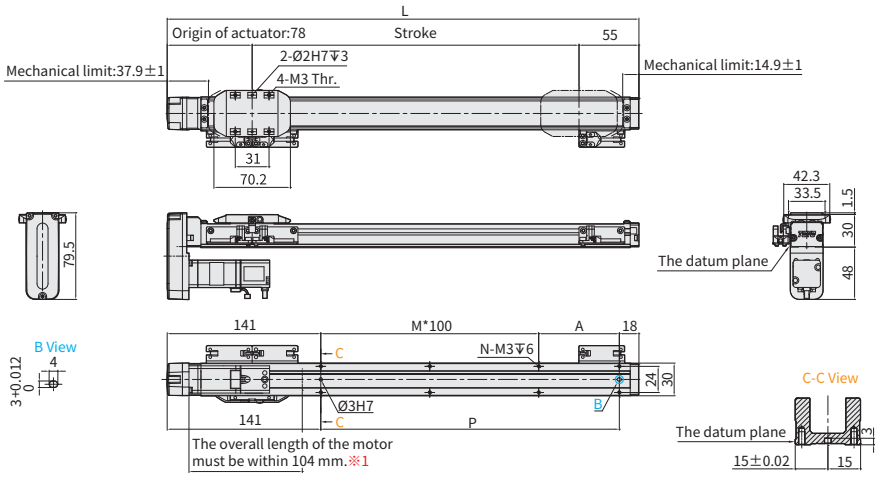

Stroke		50	100	150	200	250	300
Limit Stroke (±1)		60	110	160	210	260	310
L		183	233	283	333	383	433
A		24	74	24	74	24	74
M		0	0	1	1	2	2
N		4	4	6	6	8	8
P		24	74	124	174	224	274
KG※1		0. 67	0. 83	0. 99	1. 14	1. 31	1. 46
Linear Speed mm/s	Lead 2	100					
	Lead 8	480					

※1 When motor with brake assembled on lower side, or the total length over than spec limit, it may not use standard pinhole. Please contact our sales department if you need more information & requirement.

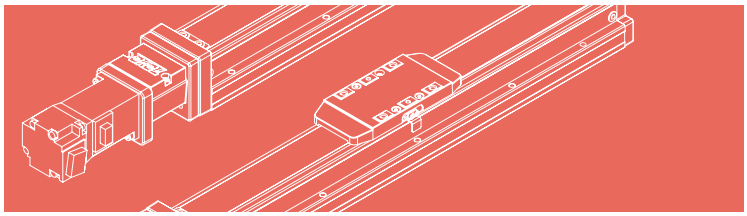

BR Motor Left Side

2D CAD 3D CAD Download CAD data at www.toyorobot.com

Unit : mm

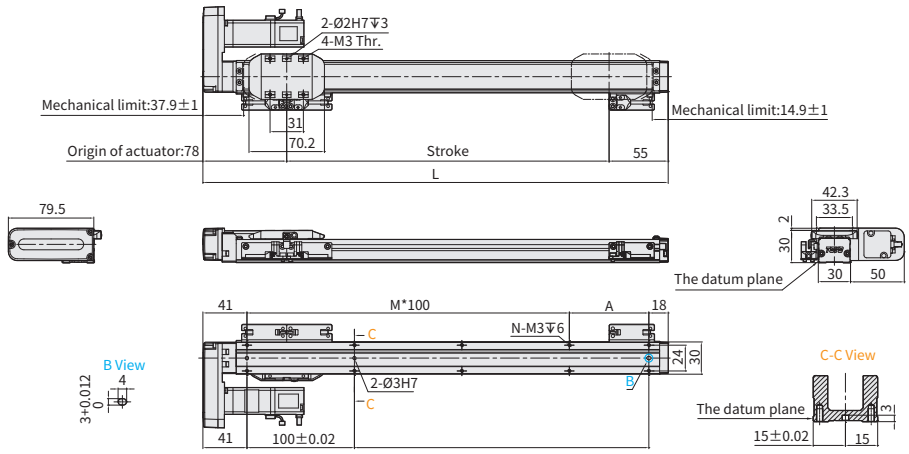

Stroke		50	100	150	200	250	300
Limit Stroke (±1)		60	110	160	210	260	310
L		183	233	283	333	383	433
A		24	74	24	74	24	74
M		1	1	2	2	3	3
N		6	6	8	8	10	10
P		24	74	124	174	224	274
KG※1		0. 67	0. 83	0. 99	1. 14	1. 31	1. 46
Linear Speed mm/s	Lead 2	100					
	Lead 8	480					

BL Motor Right Side

2D CAD 3D CAD Download CAD data at www.toyorobot.com

Unit : mm

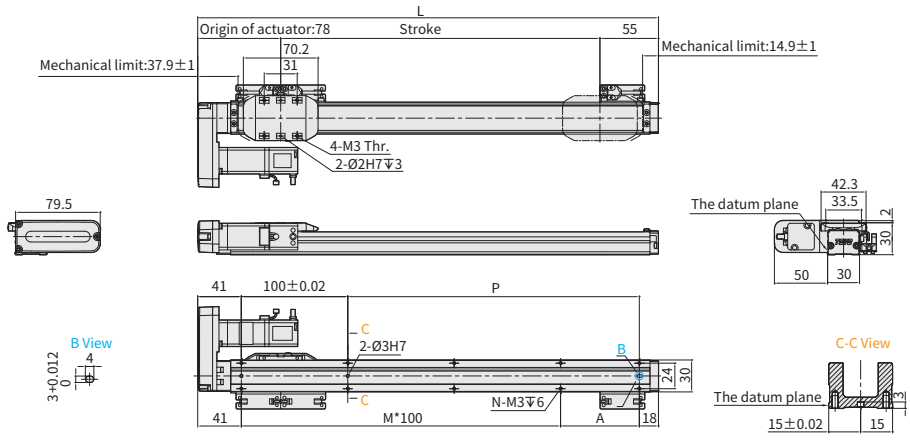

Stroke		50	100	150	200	250	300
Limit Stroke (±1)		60	110	160	210	260	310
L		198	248	298	348	398	448
A		24	74	24	74	24	74
M		1	1	2	2	3	3
N		6	6	8	8	10	10
P		24	74	124	174	224	274
KG※1		0. 67	0. 83	0. 99	1. 14	1. 31	1. 46
Linear Speed mm/s	Lead 2	100					
	Lead 8	480					

GTH4K

▶ Integrated Linear Bearing ▶ Ball Screw Drive

The picture is just for the reference. Please check the the actual dimensions on the drawing.

Ordering Method

GTH4K - L2 - 100 - BC - X - C4 - 0001

Model | **Special Order No.**

Stroke

50-800mm
50mm increments

Ball Screw Lead

2	2mm
6	6mm
12	12mm

Motor Position

BC	Motor Exposed
BM	Motor Bottom Side
BL	Motor Left Side
BR	Motor Right Side
-*2	No Motor Position

Motor Flange、Power Output

With Motor Flange & Coupling				
M	Mitsubishi	05	50W	B
P	Panasonic	10	-	
Y	Yaskawa	20	-	
T	Delta	40	-	
X	Others*1			
Without Motor Flange & Coupling				
K	No Motor Flange & Coupling*2			

*1 When choosing non-standard motor X, the motor spec must be provided and confirmed by TOYO for installation before the order is established.

*2 When K is selected, the motor position need no description.

Home Sensor

Outside	
C	Motor Side
D	Opposite Motor Side
No Sensor	
E	No Sensor

*When the stroke is 50mm, the sensor installation has the following restrictions:

1.The home sensor and the limit sensor must be installed on different sides of the body.

2.The sensor trigger device must be installed on both sides of the device.

Limit Sensor

Outside	
3	1 Pc
4	2 Pc
No Sensor	
5	No Sensor

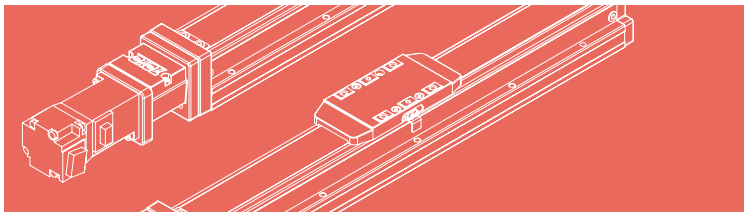

Specification

Item							
Ball screw	Outer dia. & Precision grade		mm	Ø10 & C7		
	Lead		mm	2	6	12
	Maximum Rotating speed		rpm	3000	3600	3600
	Maximum linear speed ※1		mm/s	100	360	720
	Basic dynamic load rating Ca		N	2265	2537	1740
	Basic static load rating Coa		N	4839	4569	3052
	Load factor			1.2	1.35	1.35
Linear Guide	Dynamic horizontal	100 Km of travel	kgf	493		
		1000 Km of travel	kgf	229		
		10000 Km of travel	kgf	106		
	Static horizontal		kg	1293		
Fixed bearing	Basic dynamic load rating Cr		N	1730		
	Static load rating Cor		N	3800		
Common Spec	Repeatability		mm	±0.005		
	Start torpue		N.cm	2		
	Allowable input torque		N.m	1.1		
	Maximum acceleration		m/s^2	10		
	Friction coefficient			0.03		
	Stroke interval		mm	50-1000 (50 increments)		
	Ambient temperature ※2		°C	0~+40		

※1 Estimated max speed and max payload when using a standard 100W servo motor.
(Confirm max speed and payload at the same time.)

※2 Customized temperature:-20°C~ 80°C. special grease requirement need to follow customization process.

Static Loading Moment

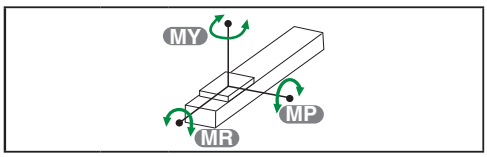

MY	N.m	79
MP	N.m	79
MR	N.m	116

Dynamic Loading Moment

Travel	km	100	1000	10000
MY	N.m	24.9	11.6	5.4
MP	N.m	24.9	11.6	5.4
MR	N.m	37.5	17.4	8.1

Parts list

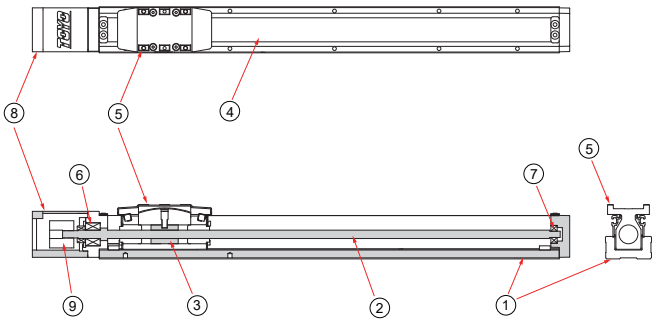

No.	Part Description	Material
1	Housing	AL6463
2	Ball Screw	S45C
3	Ball Screw Nut	S45C
4	Steel Band	SUS430
5	Carriage	SNCM21H
6	Ball Bearing Dual Arrangement	SUJ2
7	Ball Bearing	SUJ2
8	Fixed Support Block-Inline Motor Mounting Bracket	AL6061
9	Coupling- Clamping	AL6061

GTH4K

▶ Integrated Linear Bearing ▶ Ball Screw Drive

BC Motor Exposed

2D CAD 3D CAD Download CAD data at www.toyorobot.com

Unit : mm

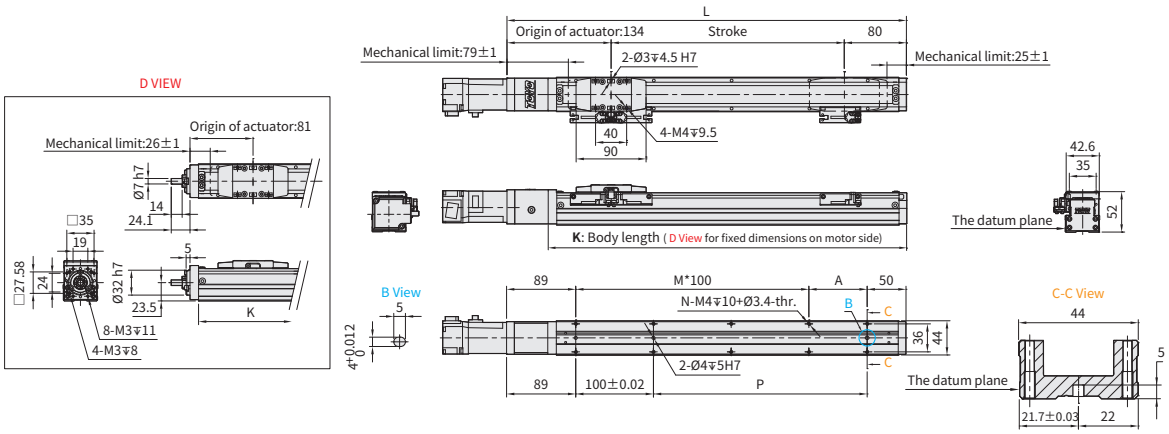

Stroke		50※2	100	150	200	250	300	350	400	450	500	550	600	650	700	750	800
Limit Stroke (±1)		70	120	170	220	270	320	370	420	470	520	570	620	670	720	770	820
L		264	314	364	414	464	514	564	614	664	714	764	814	864	914	964	1014
A		25	75	25	75	25	75	25	75	25	75	25	75	25	75	25	75
M		1	1	2	2	3	3	4	4	5	5	6	6	7	7	8	8
N		6	6	8	8	10	10	12	12	14	14	16	16	18	18	20	20
P		25	75	125	175	225	275	325	375	425	475	525	575	625	675	725	775
KG※1		2. 43	2. 64	2. 86	3. 07	3. 28	3. 50	3. 71	3. 93	4. 14	4. 36	4. 57	4. 79	5. 00	5. 22	5. 43	5. 65
K		211	261	311	361	411	461	511	561	611	661	711	761	811	861	911	961
Linear Speed mm/s	Lead 2	100											90	80	70	60	50
	Lead 6	360									330	320	270	240	210	180	150
	Lead 12	720									660	640	540	480	420	360	300

※1 KG refers to the weight with motor related accessories (excluding motor), not corresponding to K Type.
※2 When the stroke is 50mm, if fixing the body from the top to the bottom, the fixing hole will be blocked by slider and only can be uses 4 screws to fix;as a result, suggest that fixing actuator body from the bottom to the top.

BM Motor Bottom Side

2D CAD 3D CAD Download CAD data at www.toyorobot.com

Unit : mm

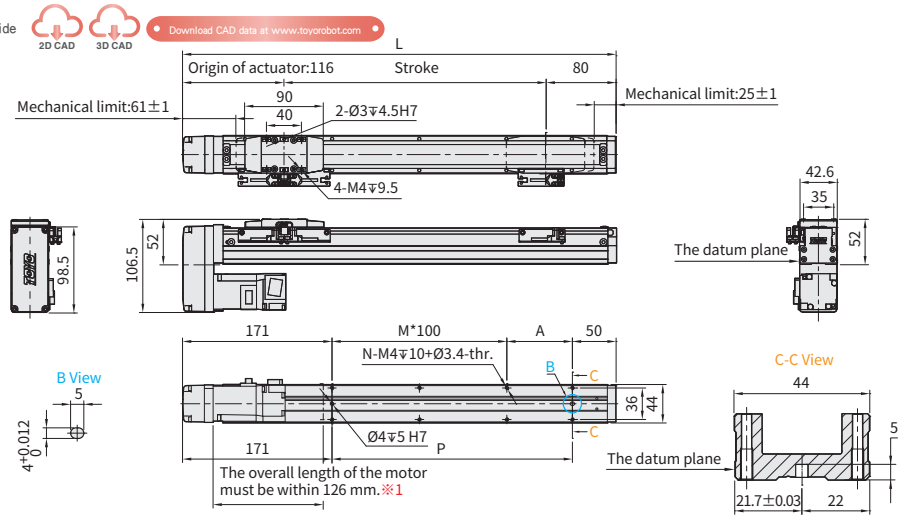

Stroke		50※2	100	150	200	250	300	350	400	450	500	550	600	650	700	750	800
Limit Stroke (±1)		70	120	170	220	270	320	370	420	470	520	570	620	670	720	770	820
L		246	296	346	396	446	496	546	596	646	696	746	796	846	896	946	996
A		25	75	25	75	25	75	25	75	25	75	25	75	25	75	25	75
M		0	0	1	1	2	2	3	3	4	4	5	5	6	6	7	7
N		4	4	6	6	8	8	10	10	12	12	14	14	16	16	18	18
P		25	75	125	175	225	275	325	375	425	475	525	575	625	675	725	775
KG		2. 54	2. 75	2. 97	3. 18	3. 39	3. 61	3. 82	4. 04	4. 25	4. 47	4. 68	4. 90	5. 11	5. 33	5. 54	5. 76
Linear Speed mm/s	Lead 2	100											90	80	70	60	50
	Lead 6	360									330	320	270	240	210	180	150
	Lead 12	720									660	640	540	480	420	360	300

※1 When motor with brake assembled on lower side, or the total length over than spec limit, it may not use standard pinhole. Please contact our sales department if you need more information & requirement.
※2 When the stroke is 50mm, if fixing the body from the top to the bottom, the fixing hole will be blocked by slider and only can be uses 4 screws to fix;as a result, suggest that fixing actuator body from the bottom to the top.

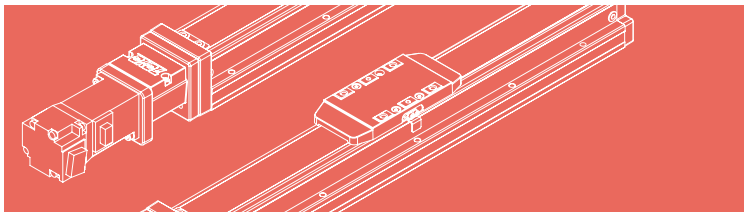

BR Motor Left Side

2D CAD 3D CAD Download CAD data at www.toyorobot.com

Unit : mm

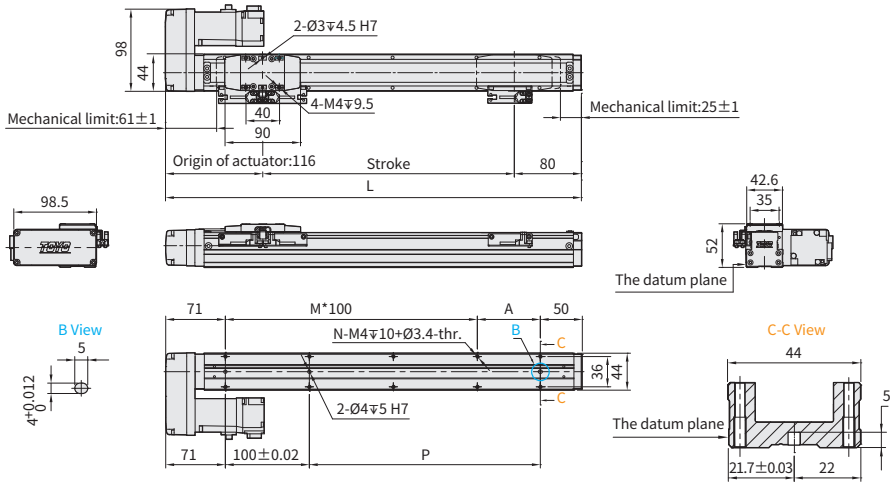

Stroke		50※2	100	150	200	250	300	350	400	450	500	550	600	650	700	750	800
Limit Stroke (±1)		70	120	170	220	270	320	370	420	470	520	570	620	670	720	770	820
L		246	296	346	396	446	496	546	596	646	696	746	796	846	896	946	996
A		25	75	25	75	25	75	25	75	25	75	25	75	25	75	25	75
M		1	1	2	2	3	3	4	4	5	5	6	6	7	7	8	8
N		6	6	8	8	10	10	12	12	14	14	16	16	18	18	20	20
P		25	75	125	175	225	275	325	375	425	475	525	575	625	675	725	775
KG		2. 54	2. 75	2. 97	3. 18	3. 39	3. 61	3. 82	4. 04	4. 25	4. 47	4. 68	4. 90	5. 11	5. 33	5. 54	5. 76
Linear Speed mm/s	Lead 2	100											90	80	70	60	50
	Lead 6	360									330	320	270	240	210	180	150
	Lead 12	720									660	640	540	480	420	360	300

※2 When the stroke is 50mm, if fixing the body from the top to the bottom, the fixing hole will be blocked by slider and only can be uses 4 screws to fix;as a result, suggest that fixing actuator body from the bottom to the top.

BL Motor Right Side

2D CAD 3D CAD Download CAD data at www.toyorobot.com

Unit : mm

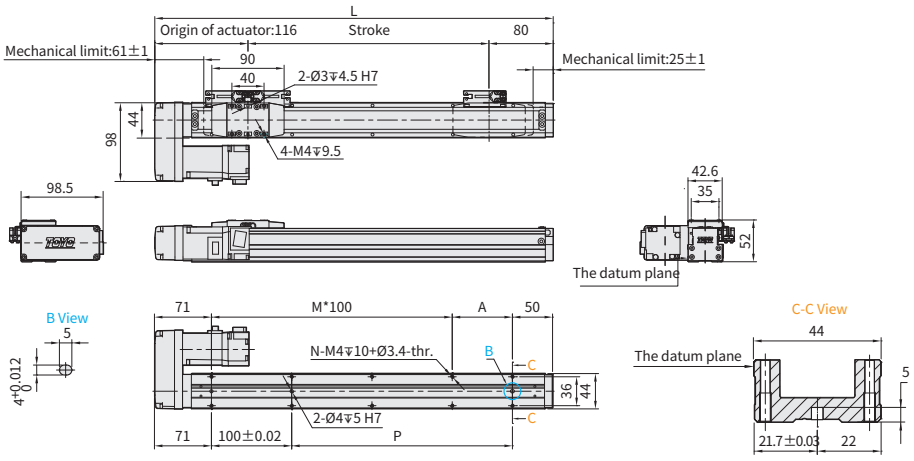

Stroke		50※2	100	150	200	250	300	350	400	450	500	550	600	650	700	750	800
Limit Stroke (±1)		70	120	170	220	270	320	370	420	470	520	570	620	670	720	770	820
L		246	296	346	396	446	496	546	596	646	696	746	796	846	896	946	996
A		25	75	25	75	25	75	25	75	25	75	25	75	25	75	25	75
M		1	1	2	2	3	3	4	4	5	5	6	6	7	7	8	8
N		6	6	8	8	10	10	12	12	14	14	16	16	18	18	20	20
P		25	75	125	175	225	275	325	375	425	475	525	575	625	675	725	775
KG		2. 54	2. 75	2. 97	3. 18	3. 39	3. 61	3. 82	4. 04	4. 25	4. 47	4. 68	4. 90	5. 11	5. 33	5. 54	5. 76
Linear Speed mm/s	Lead 2	100											90	80	70	60	50
	Lead 6	360									330	320	270	240	210	180	150
	Lead 12	720									660	640	540	480	420	360	300

※2 When the stroke is 50mm, if fixing the body from the top to the bottom, the fixing hole will be blocked by slider and only can be uses 4 screws to fix;as a result, suggest that fixing actuator body from the bottom to the top.

GTH4K

▶ Integrated Linear Bearing ▶ Ball Screw Drive

The picture is just for the reference. Please check the the actual dimensions on the drawing.

Ordering Method

GTH4K - L2 - 100 - BC - X - C4 - 0001

Model | **Special Order No.**

Stroke

50-800mm
50mm increments

Ball Screw Lead

2	2mm
6	6mm
12	12mm

Motor Position

BC	Motor Exposed
BM	Motor Bottom Side
BL	Motor Left Side
BR	Motor Right Side
-*2	No Motor Position

Motor Flange、Power Output

With Motor Flange & Coupling				
M	Mitsubishi	05	-	B
P	Panasonic	10	100W	
Y	Yaskawa	20	-	
T	Delta	40	-	
X	Others*1			
Without Motor Flange & Coupling				
K	No Motor Flange & Coupling*2			

*1 When choosing non-standard motor X, the motor spec must be provided and confirmed by TOYO for installation before the order is established.

*2 When K is selected, the motor position need no description.

Home Sensor

Outside	
C	Motor Side
D	Opposite Motor Side
No Sensor	
E	No Sensor

*When the stroke is 50mm, the sensor installation has the following restrictions:

1.The home sensor and the limit sensor must be installed on different sides of the body.

2.The sensor trigger device must be installed on both sides of the device.

Limit Sensor

Outside	
3	1 Pc
4	2 Pc
No Sensor	
5	No Sensor

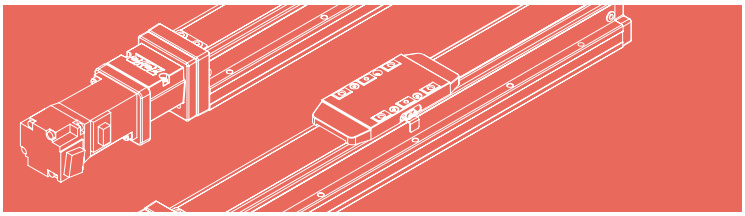

Specification

Item							
Ball screw	Outer dia. & Precision grade			mm	Ø10 & C7		
	Lead			mm	2	6	12
	Maximum Rotating speed			rpm	3000	3600	3600
	Maximum linear speed ※1			mm/s	100	360	720
	Basic dynamic load rating Ca			N	2265	2537	1740
	Basic static load rating Coa			N	4839	4569	3052
	Load factor				1.2	1.35	1.35
Linear Guide	Dynamic horizontal	100 Km of travel		kgf	493		
		1000 Km of travel		kgf	229		
		10000 Km of travel		kgf	106		
	Static horizontal			kg	1293		
Fixed bearing	Basic dynamic load rating Cr			N	1730		
	Static load rating Cor			N	3800		
Common Spec	Repeatability			mm	±0.005		
	Start torpue			N.cm	2		
	Allowable input torque			N.m	1.1		
	Maximum acceleration			m/s^2	10		
	Friction coefficient				0.03		
	Stroke interval			mm	50-1000 (50 increments)		
	Ambient temperature ※2			°C	0~+40		

※1 Estimated max speed and max payload when using a standard 100W servo motor.
(Confirm max speed and payload at the same time.)

※2 Customized temperature:-20°C~ 80°C. special grease requirement need to follow customization process.

Static Loading Moment

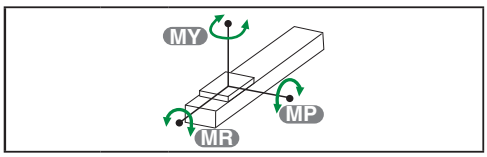

MY	N.m	79
MP	N.m	79
MR	N.m	116

Dynamic Loading Moment

Travel	km	100	1000	10000
MY	N.m	24.9	11.6	5.4
MP	N.m	24.9	11.6	5.4
MR	N.m	37.5	17.4	8.1

Parts list

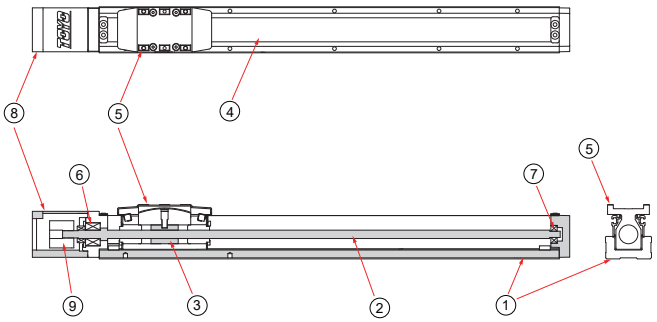

No.	Part Description	Material
1	Housing	AL6463
2	Ball Screw	S45C
3	Ball Screw Nut	S45C
4	Steel Band	SUS430
5	Carriage	SNCM21H
6	Ball Bearing Dual Arrangement	SUJ2
7	Ball Bearing	SUJ2
8	Fixed Support Block-Inline Motor Mounting Bracket	AL6061
9	Coupling- Clamping	AL6061

GTH4K

▶ Integrated Linear Bearing ▶ Ball Screw Drive

BC Motor Exposed

2D CAD 3D CAD Download CAD data at www.toyorobot.com

Unit : mm

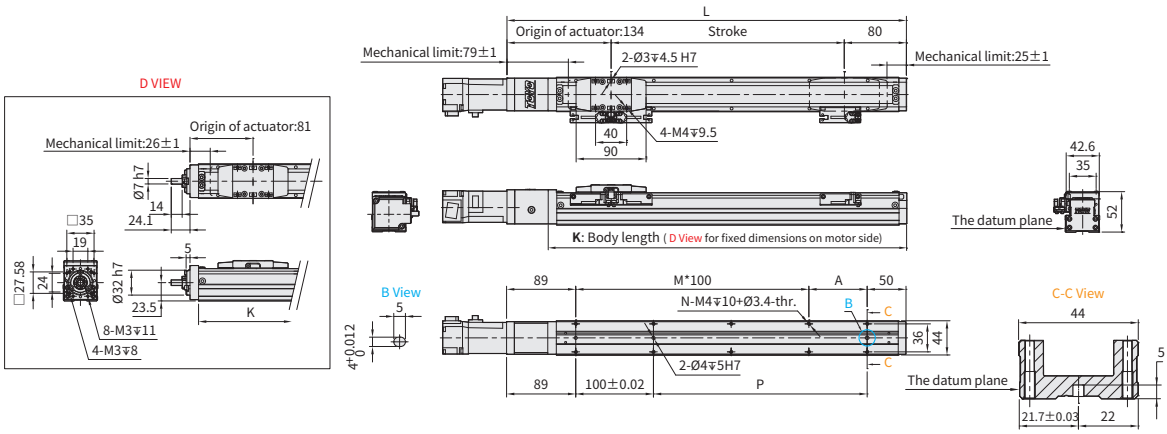

Stroke		50※2	100	150	200	250	300	350	400	450	500	550	600	650	700	750	800
Limit Stroke (±1)		70	120	170	220	270	320	370	420	470	520	570	620	670	720	770	820
L		264	314	364	414	464	514	564	614	664	714	764	814	864	914	964	1014
A		25	75	25	75	25	75	25	75	25	75	25	75	25	75	25	75
M		1	1	2	2	3	3	4	4	5	5	6	6	7	7	8	8
N		6	6	8	8	10	10	12	12	14	14	16	16	18	18	20	20
P		25	75	125	175	225	275	325	375	425	475	525	575	625	675	725	775
KG※1		2. 43	2. 64	2. 86	3. 07	3. 28	3. 50	3. 71	3. 93	4. 14	4. 36	4. 57	4. 79	5. 00	5. 22	5. 43	5. 65
K		211	261	311	361	411	461	511	561	611	661	711	761	811	861	911	961
Linear Speed mm/s	Lead 2	100											90	80	70	60	50
	Lead 6	360									330	320	270	240	210	180	150
	Lead 12	720									660	640	540	480	420	360	300

※1 KG refers to the weight with motor related accessories (excluding motor), not corresponding to K Type.
※2 When the stroke is 50mm, if fixing the body from the top to the bottom, the fixing hole will be blocked by slider and only can be uses 4 screws to fix;as a result, suggest that fixing actuator body from the bottom to the top.

BM Motor Bottom Side

2D CAD 3D CAD Download CAD data at www.toyorobot.com

Unit : mm

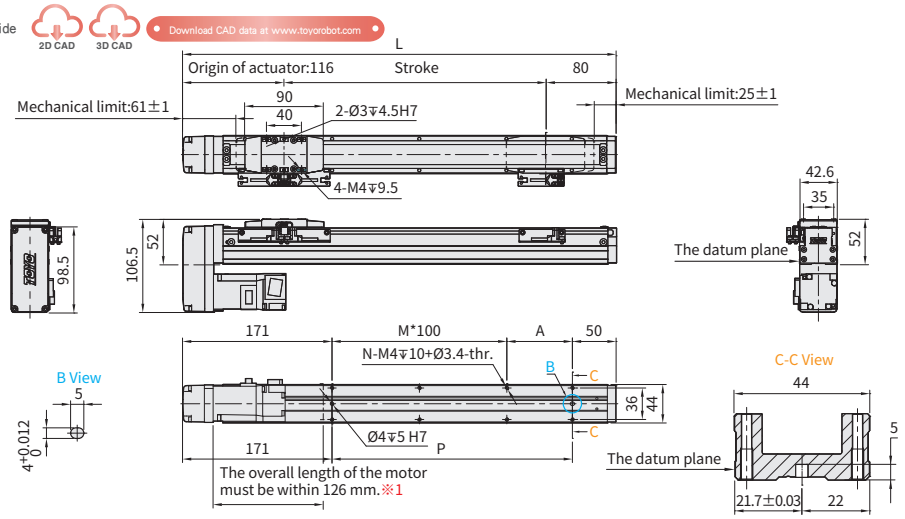

Stroke		50※2	100	150	200	250	300	350	400	450	500	550	600	650	700	750	800
Limit Stroke (±1)		70	120	170	220	270	320	370	420	470	520	570	620	670	720	770	820
L		246	296	346	396	446	496	546	596	646	696	746	796	846	896	946	996
A		25	75	25	75	25	75	25	75	25	75	25	75	25	75	25	75
M		0	0	1	1	2	2	3	3	4	4	5	5	6	6	7	7
N		4	4	6	6	8	8	10	10	12	12	14	14	16	16	18	18
P		25	75	125	175	225	275	325	375	425	475	525	575	625	675	725	775
KG		2. 54	2. 75	2. 97	3. 18	3. 39	3. 61	3. 82	4. 04	4. 25	4. 47	4. 68	4. 90	5. 11	5. 33	5. 54	5. 76
Linear Speed mm/s	Lead 2	100											90	80	70	60	50
	Lead 6	360									330	320	270	240	210	180	150
	Lead 12	720									660	640	540	480	420	360	300

※1 When motor with brake assembled on lower side, or the total length over than spec limit, it may not use standard pinhole. Please contact our sales department if you need more information & requirement.
※2 When the stroke is 50mm, if fixing the body from the top to the bottom, the fixing hole will be blocked by slider and only can be uses 4 screws to fix;as a result, suggest that fixing actuator body from the bottom to the top.

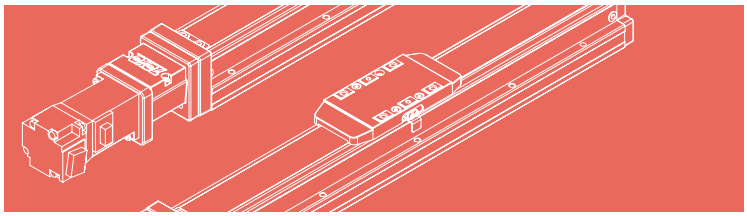

BR Motor Left Side

2D CAD 3D CAD Download CAD data at www.toyorobot.com

Unit : mm

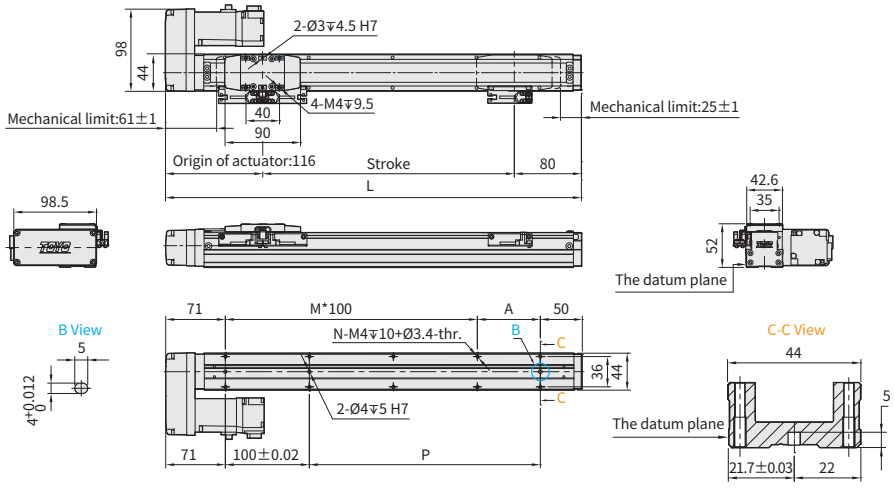

Stroke		50※2	100	150	200	250	300	350	400	450	500	550	600	650	700	750	800
Limit Stroke (±1)		70	120	170	220	270	320	370	420	470	520	570	620	670	720	770	820
L		246	296	346	396	446	496	546	596	646	696	746	796	846	896	946	996
A		25	75	25	75	25	75	25	75	25	75	25	75	25	75	25	75
M		1	1	2	2	3	3	4	4	5	5	6	6	7	7	8	8
N		6	6	8	8	10	10	12	12	14	14	16	16	18	18	20	20
P		25	75	125	175	225	275	325	375	425	475	525	575	625	675	725	775
KG		2.54	2.75	2.97	3.18	3.39	3.61	3.82	4.04	4.25	4.47	4.68	4.90	5.11	5.33	5.54	5.76
Linear Speed mm/s	Lead 2	100											90	80	70	60	50
	Lead 6	360									330	320	270	240	210	180	150
	Lead 12	720									660	640	540	480	420	360	300

※2 When the stroke is 50mm, if fixing the body from the top to the bottom, the fixing hole will be blocked by slider and only can be uses 4 screws to fix;as a result, suggest that fixing actuator body from the bottom to the top.

BL Motor Right Side

2D CAD 3D CAD Download CAD data at www.toyorobot.com

Unit : mm

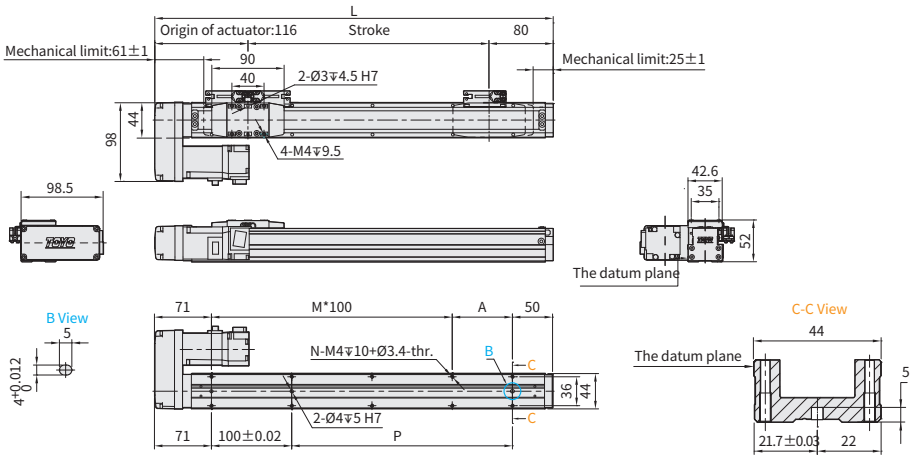

Stroke		50※2	100	150	200	250	300	350	400	450	500	550	600	650	700	750	800
Limit Stroke (±1)		70	120	170	220	270	320	370	420	470	520	570	620	670	720	770	820
L		246	296	346	396	446	496	546	596	646	696	746	796	846	896	946	996
A		25	75	25	75	25	75	25	75	25	75	25	75	25	75	25	75
M		1	1	2	2	3	3	4	4	5	5	6	6	7	7	8	8
N		6	6	8	8	10	10	12	12	14	14	16	16	18	18	20	20
P		25	75	125	175	225	275	325	375	425	475	525	575	625	675	725	775
KG		2.54	2.75	2.97	3.18	3.39	3.61	3.82	4.04	4.25	4.47	4.68	4.90	5.11	5.33	5.54	5.76
Linear Speed mm/s	Lead 2	100											90	80	70	60	50
	Lead 6	360									330	320	270	240	210	180	150
	Lead 12	720									660	640	540	480	420	360	300

※2 When the stroke is 50mm, if fixing the body from the top to the bottom, the fixing hole will be blocked by slider and only can be uses 4 screws to fix;as a result, suggest that fixing actuator body from the bottom to the top.

GTH5K

▶ Integrated Linear Bearing ▶ Ball Screw Drive

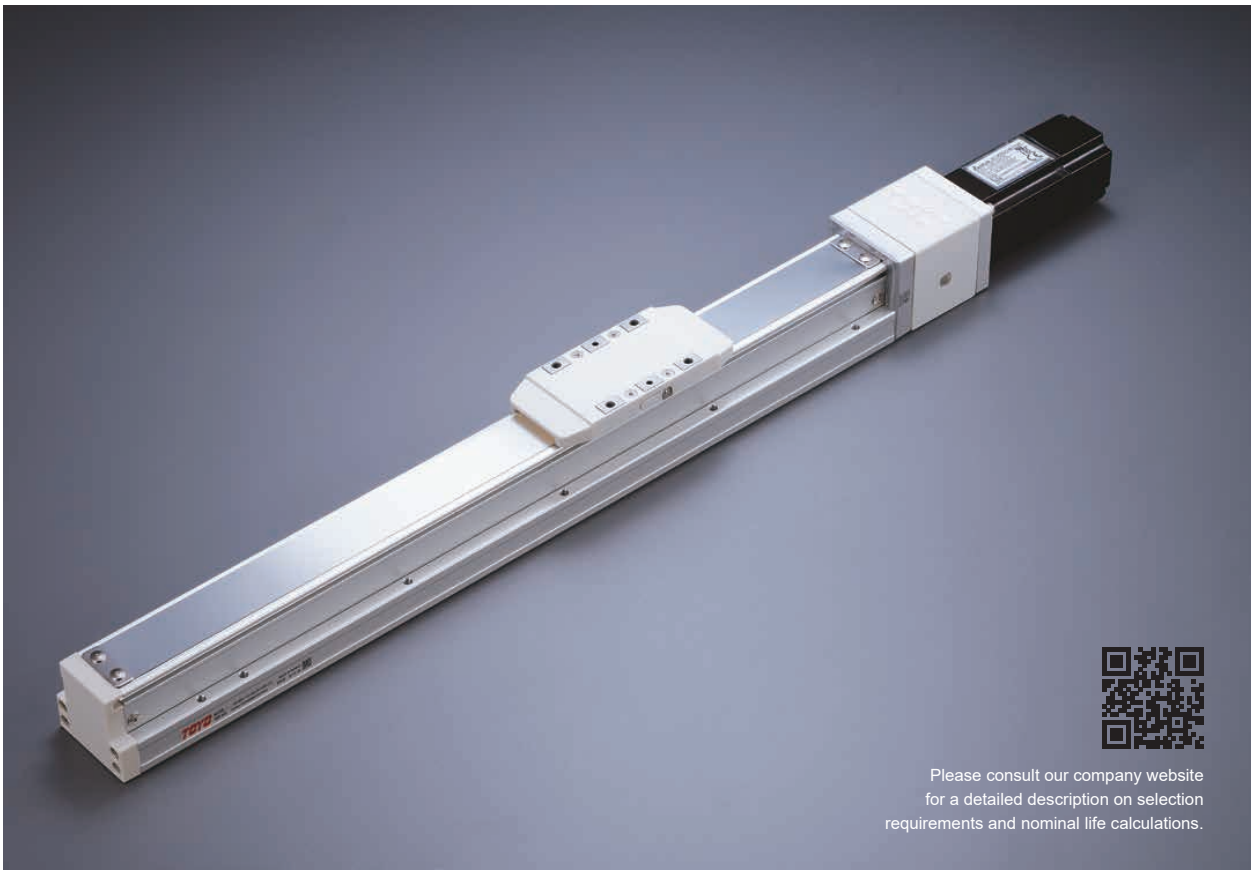

The picture is just for the reference. Please check the the actual dimensions on the drawing.

Ordering Method

GTH5K - L 5 - 100 - BC - X - C4 - 0001

Model

Special Order No.

Ballscrew Accuracy Grade

L	Rolled Ballscrews
C	Ground Ballscrews

*C precision-level ground ball screws are not available in all stroke lengths, please consult the model datasheet.

Stroke

Rolled Ballscrews
50-800mm(50mm increments)
Ground Ballscrews
50-300mm(50mm increments)

Ball Screw Lead

2	2mm
5	5mm
10	10mm
20	20mm

Motor Position

BC	Motor Exposed
BM	Motor Bottom Side
BL	Motor Left Side
BR	Motor Right Side
-*2	No Motor Position

Motor Flange、Power Output

With Motor Flange & Coupling				
M	Mitsubishi	05	-	B
P	Panasonic	10	100W	
Y	Yaskawa	20	-	
T	Delta	40	-	
X	Others*1			
Without Motor Flange & Coupling				
K	No Motor Flange & Coupling*2			

*1 When choosing non-standard motor X, the motor spec must be provided and confirmed by TOYO for installation before the order is established.

*2 When K is selected, the motor position need no description.

Home Sensor

Outside	
C	Motor Side
D	Opposite Motor Side
No Sensor	
E	No Sensor

*When the stroke is 50mm, the sensor installation has the following restrictions:

1.The home sensor and the limit sensor must be installed on different sides of the body.

2.The sensor trigger device must be installed on both sides of the device.

Limit Sensor

Outside	
3	1 Pc
4	2 Pc
No Sensor	
5	No Sensor

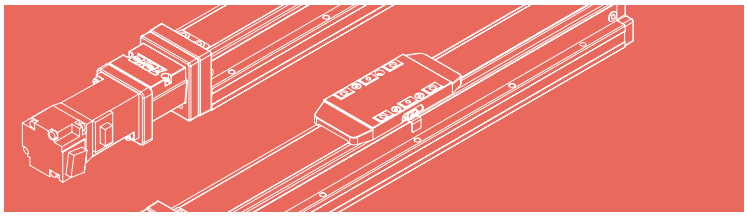

Specification

Item	Ball Screw Spec.	Ballscrew Accuracy Grade Code			L		C
		Ballscrew Accuracy Grade			C7 Rolled Ballscrews		C5 Ground Ballscrews
		Repeatability		mm	±0.005		±0.003
		Stroke (increments)		mm	50-1050mm (50 increments)		50-300mm (50 increments)

Item	Ball screw	Outer dia. & Precision grade		mm	ø12 & C7			
		Lead		mm	2	5	10	20
		Maximum Rotating speed		rpm	3000	3600	3600	3600
		Maximum linear speed ※1		mm/s	100	300	600	1200
		Basic dynamic load rating Ca		N	2411	4829	4680	11284
		Basic static load rating Coa		N	5779	7836	7649	20410
		Load factor			1.2	1.2	1.35	1.35
	Linear Guide	Dynamic horizontal	100 Km of travel	kgf	602			
			1000 Km of travel	kgf	279			
			10000 Km of travel	kgf	130			
		Static horizontal		kg	1724			
	Fixed bearing	Basic dynamic load rating Cr		N	1730			
		Static load rating Cor		N	3800			
	Common Spec	Start torpue		N.cm	7			
		Allowable input torque		N.m	1.1			
		Maximum acceleration		m/s^2	10			
		Friction coefficient			0.03			
		Ambient temperature ※2		°C	0~+40			

※1 Estimated max speed and max payload when using a standard 100W servo motor.
(Confirm max speed and payload at the same time.)

※2 Customized temperature:-20°C~ 80°C. special grease requirement need to follow customization process.

Static Loading Moment

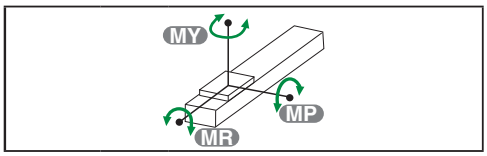

MY	N.m	103
MP	N.m	103
MR	N.m	144

Dynamic Loading Moment

Travel	km	100	1000	10000
MY	N.m	40.8	18.9	8.8
MP	N.m	40.8	18.9	8.8
MR	N.m	58.8	27.2	12.6

Parts list

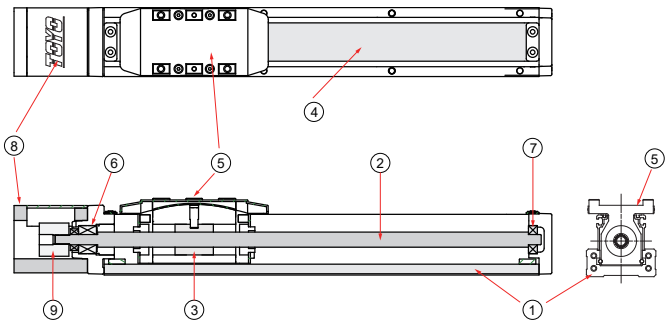

No.	Part Description	Material
1	Housing	AL6463
2	Ball Screw	S45C
3	Ball Screw Nut	S45C
4	Steel Band	SUS430
5	Carriage	SNCM21H
6	Ball Bearing Dual Arrangement	SUJ2
7	Ball Bearing	SUJ2
8	Fixed Support Block-Inline Motor Mounting Bracket	AL6061
9	Coupling- Clamping	AL6061

GTH5K

▶ Integrated Linear Bearing ▶ Ball Screw Drive

BC Motor Exposed

2D CAD 3D CAD Download CAD data at www.toyorobot.com

Unit : mm

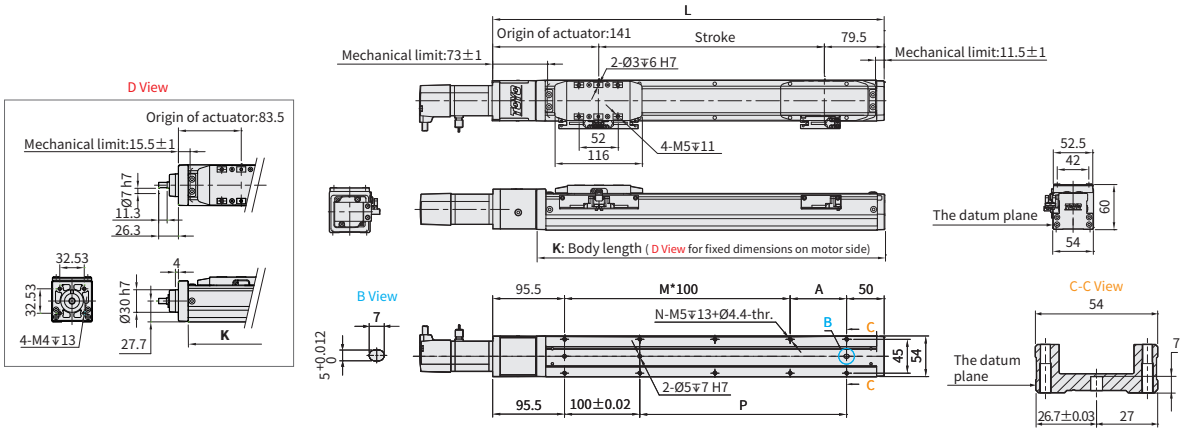

Stroke		50※2	100	150	200	250	300	350	400	450	500	550	600	650	700	750	800
Limit Stroke (±1)		70	120	170	220	270	320	370	420	470	520	570	620	670	720	770	820
L		270.5	320.5	370.5	420.5	470.5	520.5	570.5	620.5	670.5	720.5	770.5	820.5	870.5	920.5	970.5	1020.5
A		25	75	25	75	25	75	25	75	25	75	25	75	25	75	25	75
M		1	1	2	2	3	3	4	4	5	5	6	6	7	7	8	8
N		6	6	8	8	10	10	12	12	14	14	16	16	18	18	20	20
P		25	75	125	175	225	275	325	375	425	475	525	575	625	675	725	775
KG※1		3.01	3.27	3.52	3.78	4.03	4.29	4.55	4.80	5.06	5.32	5.57	5.83	6.08	6.34	6.60	6.85
K		213	263	313	363	413	463	513	563	613	663	713	763	813	863	913	963
Linear Speed mm/s	Lead 2	100												90	80	70	60
	Lead 5	300										275	250	225	200	175	150
	Lead 10	600										550	500	450	400	350	300
	Lead 20	1200										1100	1000	900	800	700	600

※1 KG refers to the weight with motor related accessories (excluding motor), not corresponding to K Type.
※2 When the stroke is 50mm, if fixing the body from the top to the bottom, the fixing hole will be blocked by slider and only can be uses 4 screws to fix;as a result, suggest that fixing actuator body from the bottom to the top.

BM Motor Bottom Side

2D CAD 3D CAD Download CAD data at www.toyorobot.com

Unit : mm

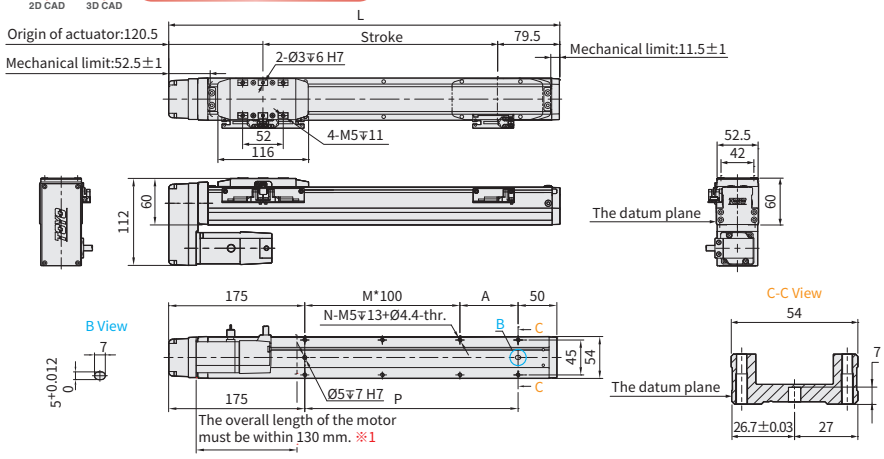

Stroke		50※2	100	150	200	250	300	350	400	450	500	550	600	650	700	750	800
Limit Stroke (±1)		70	120	170	220	270	320	370	420	470	520	570	620	670	720	770	820
L		250	300	350	400	450	500	550	600	650	700	750	800	850	900	950	1000
A		25	75	25	75	25	75	25	75	25	75	25	75	25	75	25	75
M		0	0	1	1	2	2	3	3	4	4	5	5	6	6	7	7
N		4	4	6	6	8	8	10	10	12	12	14	14	16	16	18	18
P		25	75	125	175	225	275	325	375	425	475	525	575	625	675	725	775
KG		3.04	3.30	3.55	3.81	4.06	4.32	4.58	4.83	5.09	5.35	5.60	5.86	6.11	6.37	6.63	6.88
Linear Speed mm/s	Lead 2	100												90	80	70	60
	Lead 5	300										275	250	225	200	175	150
	Lead 10	600										550	500	450	400	350	300
	Lead 20	1200										1100	1000	900	800	700	600

※1 When motor with brake assembled on lower side, or the total length over than spec limit, it may not use standard pinhole. Please contact our sales department if you need more information & requirement.
※2 When the stroke is 50mm, if fixing the body from the top to the bottom, the fixing hole will be blocked by slider and only can be uses 4 screws to fix;as a result, suggest that fixing actuator body from the bottom to the top.

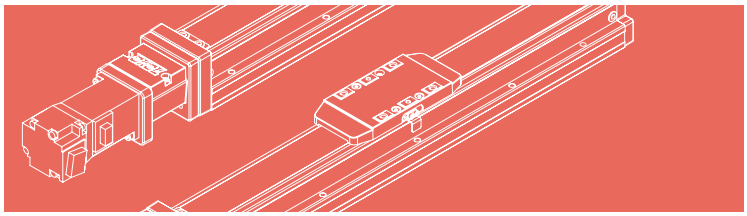

BR Motor Left Side

2D CAD 3D CAD Download CAD data at www.toyorobot.com

Unit : mm

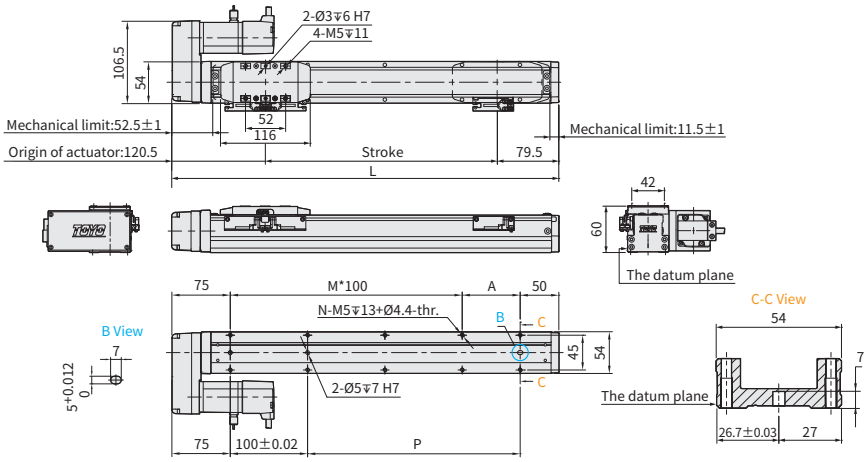

Stroke		50※2	100	150	200	250	300	350	400	450	500	550	600	650	700	750	800
Limit Stroke (±1)		70	120	170	220	270	320	370	420	470	520	570	620	670	720	770	820
L		250	300	350	400	450	500	550	600	650	700	750	800	850	900	950	1000
A		25	75	25	75	25	75	25	75	25	75	25	75	25	75	25	75
M		1	1	2	2	3	3	4	4	5	5	6	6	7	7	8	8
N		6	6	8	8	10	10	12	12	14	14	16	16	18	18	20	20
P		25	75	125	175	225	275	325	375	425	475	525	575	625	675	725	775
KG		3. 04	3. 30	3. 55	3. 81	4. 06	4. 32	4. 58	4. 83	5. 09	5. 35	5. 60	5. 86	6. 11	6. 37	6. 63	6. 88
Linear Speed mm/s	Lead 2	100												90	80	70	60
	Lead 5	300										275	250	225	200	175	150
	Lead 10	600										550	500	450	400	350	300
	Lead 20	1200										1100	1000	900	800	700	600

※2 When the stroke is 50mm, if fixing the body from the top to the bottom, the fixing hole will be blocked by slider and only can be uses 4 screws to fix;as a result, suggest that fixing actuator body from the bottom to the top.

BL Motor Right Side

2D CAD 3D CAD Download CAD data at www.toyorobot.com

Unit : mm

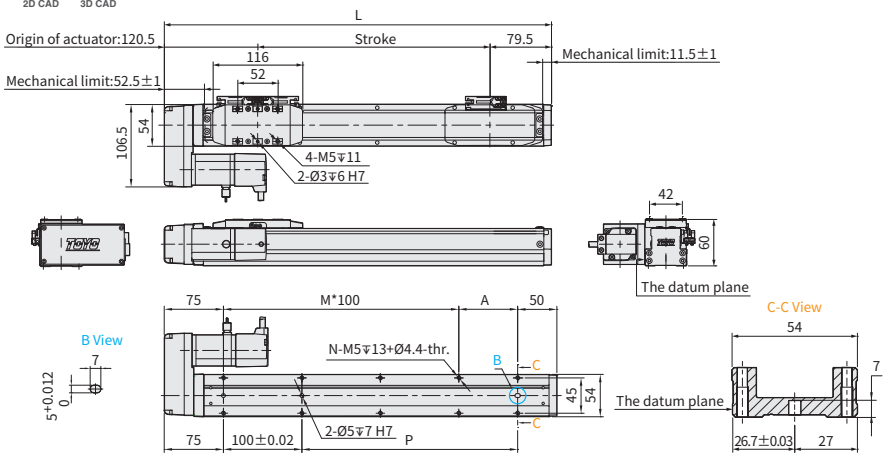

Stroke		50※2	100	150	200	250	300	350	400	450	500	550	600	650	700	750	800
Limit Stroke (±1)		70	120	170	220	270	320	370	420	470	520	570	620	670	720	770	820
L		250	300	350	400	450	500	550	600	650	700	750	800	850	900	950	1000
A		25	75	25	75	25	75	25	75	25	75	25	75	25	75	25	75
M		1	1	2	2	3	3	4	4	5	5	6	6	7	7	8	8
N		6	6	8	8	10	10	12	12	14	14	16	16	18	18	20	20
P		25	75	125	175	225	275	325	375	425	475	525	575	625	675	725	775
KG		3. 04	3. 30	3. 55	3. 81	4. 06	4. 32	4. 58	4. 83	5. 09	5. 35	5. 60	5. 86	6. 11	6. 37	6. 63	6. 88
Linear Speed mm/s	Lead 2	100												90	80	70	60
	Lead 5	300										275	250	225	200	175	150
	Lead 10	600										550	500	450	400	350	300
	Lead 20	1200										1100	1000	900	800	700	600

※2 When the stroke is 50mm, if fixing the body from the top to the bottom, the fixing hole will be blocked by slider and only can be uses 4 screws to fix;as a result, suggest that fixing actuator body from the bottom to the top.

GTH8K

▶ Integrated Linear Bearing ▶ Ball Screw Drive

The picture is just for the reference. Please check the the actual dimensions on the drawing.

Ordering Method

GTH8K - L10 - 100 - BC - X - C4 - 0001

Model | **Special Order No.**

Ballscrew Accuracy Grade

L	Rolled Ballscrews
C	Ground Ballscrews

*C precision-level ground ball screws are not available in all stroke lengths, please consult the model datasheet.

Stroke

Rolled Ballscrews
50-1100mm(50mm increments)
Ground Ballscrews
50-700mm(50mm increments)

Ball Screw Lead

5	5mm
10	10mm
20	20mm

Motor Position

BC	Motor Exposed
BM	Motor Bottom Side
BL	Motor Left Side
BR	Motor Right Side
-*2	No Motor Position

Motor Flange、Power Output

With Motor Flange & Coupling				
M	Mitsubishi	05	-	B
P	Panasonic	10	-	
Y	Yaskawa	20	200W	
T	Delta	40	-	
X	Others*1			
Without Motor Flange & Coupling				
K	No Motor Flange & Coupling*2			

*1 When choosing non-standard motor X, the motor spec must be provided and confirmed by TOYO for installation before the order is established.

*2 When K is selected, the motor position need no description.

Home Sensor

Outside	
C	Motor Side
D	Opposite Motor Side
No Sensor	
E	No Sensor

*When the stroke is 50mm, the sensor installation has the following restrictions:

1.The home sensor and the limit sensor must be installed on different sides of the body.

2.The sensor trigger device must be installed on both sides of the device.

Limit Sensor

Outside	
3	1 Pc
4	2 Pc
No Sensor	
5	No Sensor

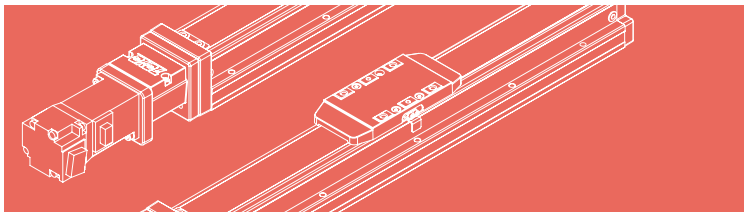

Specification

Item	Ball Screw Spec.	Ballscrew Accuracy Grade Code		L	C
		Ballscrew Accuracy Grade		C7 Rolled Ballscrews	C5 Ground Ballscrews
		Repeatability	mm	±0.005	±0.003
		Stroke Pitch	mm	50-1250mm (50 increments)	50-700mm (50 increments)

Item	Ball screw	Outer dia. & Precision grade	mm	Ø16 & C7		
		Lead	mm	5	10	20
		Maximum Rotating speed	rpm	3600	3600	3600
		Maximum linear speed ※1	mm/s	300	600	1200
		Basic dynamic load rating Ca	N	8042	6300	4152
		Basic static load rating Coa	N	15088	11596	7439
		Load factor		1.2	1.35	1.35
	Linear Guide	Dynamic horizontal 100 Km of travel	kgf	1899		
		Dynamic horizontal 1000 Km of travel	kgf	881		
		Dynamic horizontal 10000 Km of travel	kgf	409		
		Static horizontal	kg	3490		
	Fixed bearing	Basic dynamic load rating Cr	N	2600		
		Static load rating Cor	N	4750		
	Common Spec	Start torpue	N.cm	10		
		Allowable input torque	N.m	2.2		
		Maximum acceleration	m/s^2	10		
		Friction coefficient		0.03		
		Ambient temperature ※2	°C	0~+40		

※1 Estimated max speed and max payload when using a standard 100W servo motor.
(Confirm max speed and payload at the same time.)

※2 Customized temperature:-20°C~ 80°C. special grease requirement need to follow customization process.

Static Loading Moment

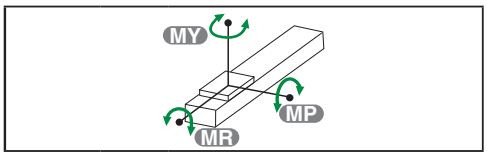

MY	N.m	318
MP	N.m	318
MR	N.m	626

Dynamic Loading Moment

Travel	km	100	1000	10000
MY	N.m	121.6	56.5	26.2
MP	N.m	121.6	56.5	26.2
MR	N.m	201.9	93.7	43.5

Parts list

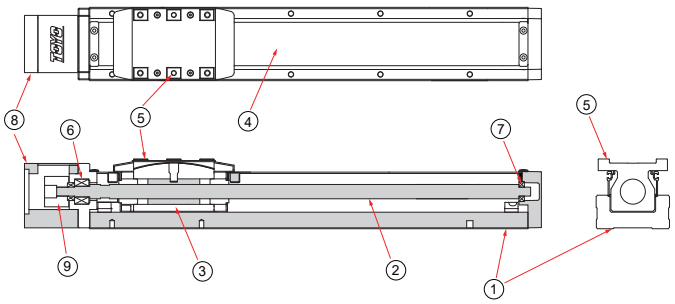

No.	Part Description	Material
1	Housing	AL6463
2	Ball Screw	S45C
3	Ball Screw Nut	S45C
4	Steel Band	SUS430
5	Carriage	SNCM21H
6	Ball Bearing Dual Arrangement	SUJ2
7	Ball Bearing	SUJ2
8	Fixed Support Block-Inline Motor Mounting Bracket	AL6061
9	Coupling- Clamping	AL6061

GTH8K

▶ Integrated Linear Bearing ▶ Ball Screw Drive

BC Motor Exposed

2D CAD 3D CAD Download CAD data at www.toyorobot.com

Unit : mm

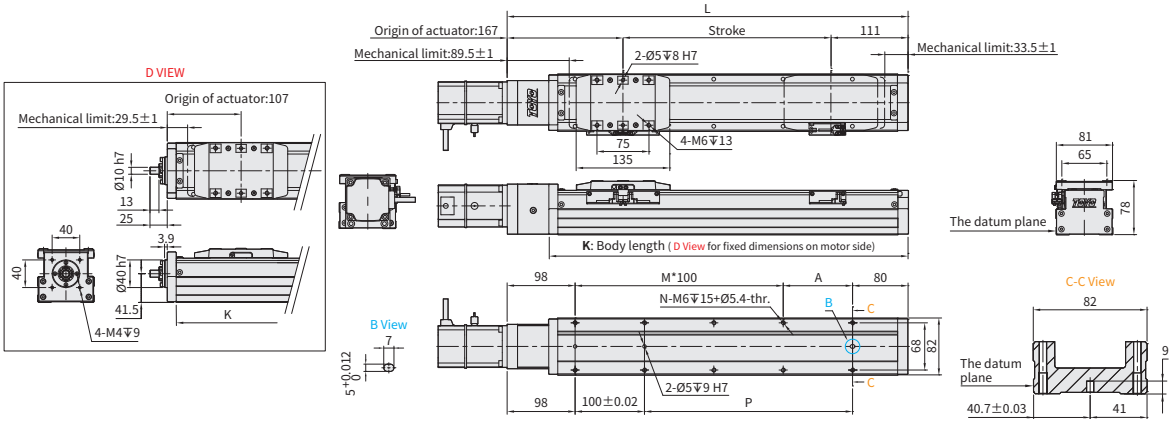

Stroke		50※2	100	150	200	250	300	350	400	450	500	550	600	650	700	750	800	850	900	950	1000	1050	1100
Limit Stroke (±1)		70	120	170	220	270	320	370	420	470	520	570	620	670	720	770	820	870	920	970	1020	1070	1120
L		328	378	428	478	528	578	628	678	728	778	828	878	928	978	1028	1078	1128	1178	1228	1278	1328	1378
A		50	100	50	100	50	100	50	100	50	100	50	100	50	100	50	100	50	100	50	100	50	100
M		1	1	2	2	3	3	4	4	5	5	6	6	7	7	8	8	9	9	10	10	11	11
N		6	6	8	8	10	10	12	12	14	14	16	16	18	18	20	20	22	22	24	24	26	26
P		50	100	150	200	250	300	350	400	450	500	550	600	650	700	750	800	850	900	950	1000	1050	1100
KG※1		6. 62	7. 31	7. 99	8. 68	9. 37	10. 05	10. 74	11. 42	12. 11	12. 79	13. 48	14. 16	14. 85	15. 54	16. 22	16. 91	17. 59	18. 28	18. 96	19. 65	20. 33	21. 02
K		268	318	368	418	468	518	568	618	668	718	768	818	868	918	968	1018	1068	1118	1168	1218	1268	1318
Linear Speed mm/s	Lead 5	300												292	250	225	200	175	150	142	133	117	108
	Lead 10	600												583	500	450	400	350	300	283	267	233	217
	Lead 20	1200												1167	1000	900	800	700	600	567	533	467	433

※1 KG refers to the weight with motor related accessories (excluding motor), not corresponding to K Type.
※2 When the stroke is 50mm, if fixing the body from the top to the bottom, the fixing hole will be blocked by slider and only can be uses 4 screws to fix;as a result, suggest that fixing actuator body from the bottom to the top.

BM Motor Bottom Side

2D CAD 3D CAD Download CAD data at www.toyorobot.com

Unit : mm

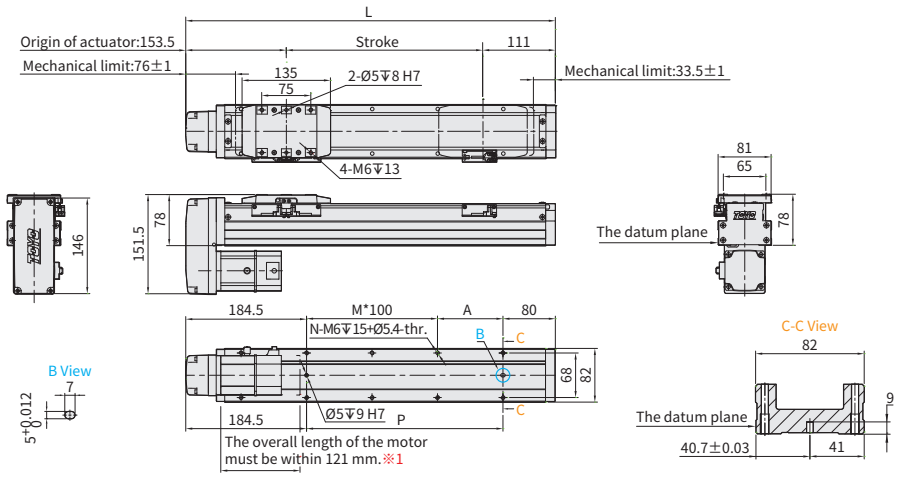

Stroke		50※2	100	150	200	250	300	350	400	450	500	550	600	650	700	750	800	850	900	950	1000	1050	1100
Limit Stroke (±1)		70	120	170	220	270	320	370	420	470	520	570	620	670	720	770	820	870	920	970	1020	1070	1120
L		314. 5	364. 5	414. 5	464. 5	514. 5	564. 5	614. 5	664. 5	714. 5	764. 5	814. 5	864. 5	914. 5	964. 5	1014. 5	1064. 5	1114. 5	1164. 5	1214. 5	1264. 5	1314. 5	1364. 5
A		50	100	50	100	50	100	50	100	50	100	50	100	50	100	50	100	50	100	50	100	50	100
M		0	0	1	1	2	2	3	3	4	4	5	5	6	6	7	7	8	8	9	9	10	10
N		4	4	6	6	8	8	10	10	12	12	14	14	16	16	18	18	20	20	22	22	24	24
P		50	100	150	200	250	300	350	400	450	500	550	600	650	700	750	800	850	900	950	1000	1050	1100
KG※1		6. 66	7. 35	8. 03	8. 72	9. 41	10. 09	10. 78	11. 46	12. 15	12. 83	13. 52	14. 20	14. 89	15. 58	16. 26	16. 95	17. 63	18. 32	19. 00	19. 69	20. 37	21. 06
Linear Speed mm/s	Lead 5	300												292	250	225	200	175	150	142	133	117	108
	Lead 10	600												583	500	450	400	350	300	283	267	233	217
	Lead 20	1200												1167	1000	900	800	700	600	567	533	467	433

※1 When motor with brake assembled on lower side, or the total length over than spec limit, it may not use standard pinhole. Please contact our sales department if you need more information & requirement.
※2 When the stroke is 50mm, if fixing the body from the top to the bottom, the fixing hole will be blocked by slider and only can be uses 4 screws to fix;as a result, suggest that fixing actuator body from the bottom to the top.

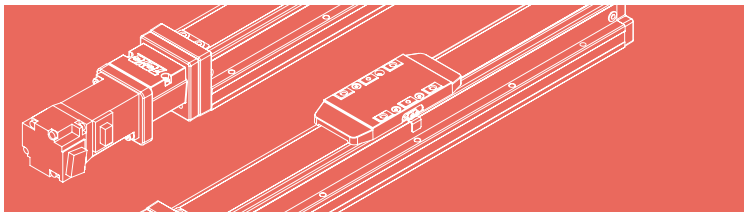

BR Motor Left Side

2D CAD 3D CAD Download CAD data at www.toyorobot.com

Unit : mm

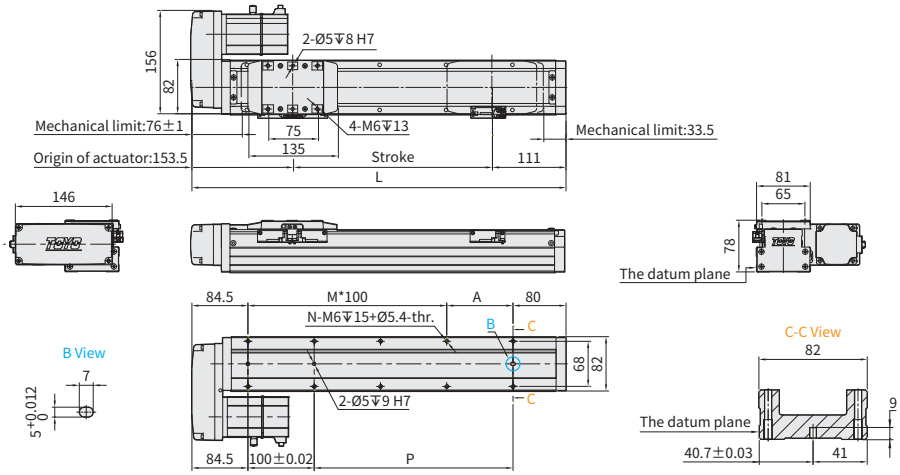

Stroke		50※2	100	150	200	250	300	350	400	450	500	550	600	650	700	750	800	850	900	950	1000	1050	1100
Limit Stroke (±1)		70	120	170	220	270	320	370	420	470	520	570	620	670	720	770	820	870	920	970	1020	1070	1120
L		314.5	364.5	414.5	464.5	514.5	564.5	614.5	664.5	714.5	764.5	814.5	864.5	914.5	964.5	1014.5	1064.5	1114.5	1164.5	1214.5	1264.5	1314.5	1364.5
A		50	100	50	100	50	100	50	100	50	100	50	100	50	100	50	100	50	100	50	100	50	100
M		1	1	2	2	3	3	4	4	5	5	6	6	7	7	8	8	9	9	10	10	11	11
N		6	6	8	8	10	10	12	12	14	14	16	16	18	18	20	20	22	22	24	24	26	26
P		50	100	150	200	250	300	350	400	450	500	550	600	650	700	750	800	850	900	950	1000	1050	1100
KG※1		6.66	7.35	8.03	8.72	9.41	10.09	10.78	11.46	12.15	12.83	13.52	14.20	14.89	15.58	16.26	16.95	17.63	18.32	19.00	19.69	20.37	21.06
Linear Speed mm/s	Lead 5	300												292	250	225	200	175	150	142	133	117	108
	Lead 10	600												583	500	450	400	350	300	283	267	233	217
	Lead 20	1200												1167	1000	900	800	700	600	567	533	467	433

※2 When the stroke is 50mm, if fixing the body from the top to the bottom, the fixing hole will be blocked by slider and only can be uses 4 screws to fix;as a result, suggest that fixing actuator body from the bottom to the top.

BL Motor Right Side

2D CAD 3D CAD Download CAD data at www.toyorobot.com

Unit : mm

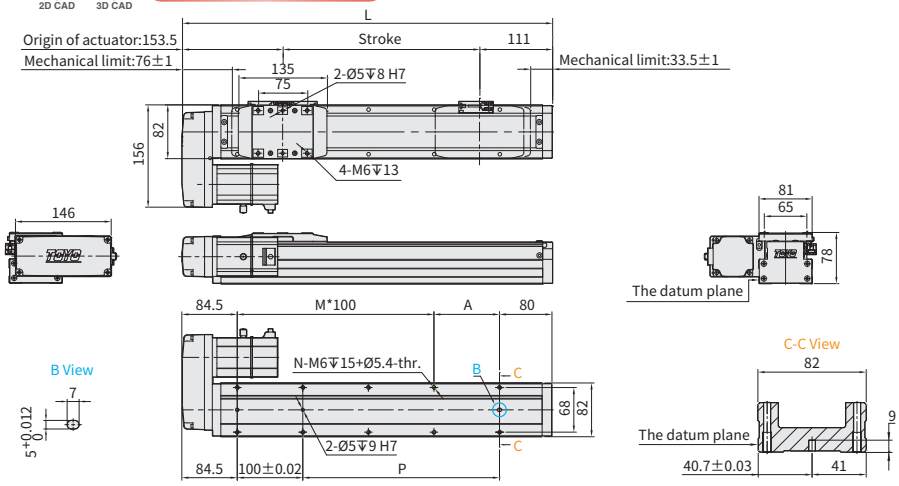

Stroke		50 *2	100	150	200	250	300	350	400	450	500	550	600	650	700	750	800	850	900	950	1000	1050	1100
Limit Stroke (±1)		70	120	170	220	270	320	370	420	470	520	570	620	670	720	770	820	870	920	970	1020	1070	1120
L		314.5	364.5	414.5	464.5	514.5	564.5	614.5	664.5	714.5	764.5	814.5	864.5	914.5	964.5	1014.5	1064.5	1114.5	1164.5	1214.5	1264.5	1314.5	1364.5
A		50	100	50	100	50	100	50	100	50	100	50	100	50	100	50	100	50	100	50	100	50	100
M		1	1	2	2	3	3	4	4	5	5	6	6	7	7	8	8	9	9	10	10	11	11
N		6	6	8	8	10	10	12	12	14	14	16	16	18	18	20	20	22	22	24	24	26	26
P		50	100	150	200	250	300	350	400	450	500	550	600	650	700	750	800	850	900	950	1000	1050	1100
KG※1		6.66	7.35	8.03	8.72	9.41	10.09	10.78	11.46	12.15	12.83	13.52	14.20	14.89	15.58	16.26	16.95	17.63	18.32	19.00	19.69	20.37	21.06
Linear Speed mm/s	Lead 5	300												292	250	225	200	175	150	142	133	117	108
	Lead 10	600												583	500	450	400	350	300	283	267	233	217
	Lead 20	1200												1167	1000	900	800	700	600	567	533	467	433

※2 When the stroke is 50mm, if fixing the body from the top to the bottom, the fixing hole will be blocked by slider and only can be uses 4 screws to fix;as a result, suggest that fixing actuator body from the bottom to the top.

GTH8K

▶ Integrated Linear Bearing ▶ Ball Screw Drive

The picture is just for the reference. Please check the the actual dimensions on the drawing.

Ordering Method

GTH8K - L10 - 100 - BC - X - C4 - 0001

Model | **Special Order No.**

Ballscrew Accuracy Grade

L	Rolled Ballscrews
C	Ground Ballscrews

*C precision-level ground ball screws are not available in all stroke lengths, please consult the model datasheet.

Stroke

Rolled Ballscrews
50-1100mm(50mm increments)
Ground Ballscrews
50-700mm(50mm increments)

Ball Screw Lead

5	5mm
10	10mm
20	20mm

Motor Position

BC	Motor Exposed
BM	Motor Bottom Side
BL	Motor Left Side
BR	Motor Right Side
-*2	No Motor Position

Motor Flange、Power Output

With Motor Flange & Coupling				
M	Mitsubishi	05	-	B
P	Panasonic	10	-	
Y	Yaskawa	20	-	
T	Delta	40	400W	
X	Others*1			
Without Motor Flange & Coupling				
K	No Motor Flange & Coupling*2			

*1 When choosing non-standard motor X, the motor spec must be provided and confirmed by TOYO for installation before the order is established.

*2 When K is selected, the motor position need no description.

Home Sensor

Outside	
C	Motor Side
D	Opposite Motor Side
No Sensor	
E	No Sensor

*When the stroke is 50mm, the sensor installation has the following restrictions:

1.The home sensor and the limit sensor must be installed on different sides of the body.

2.The sensor trigger device must be installed on both sides of the device.

Limit Sensor

Outside	
3	1 Pc
4	2 Pc
No Sensor	
5	No Sensor

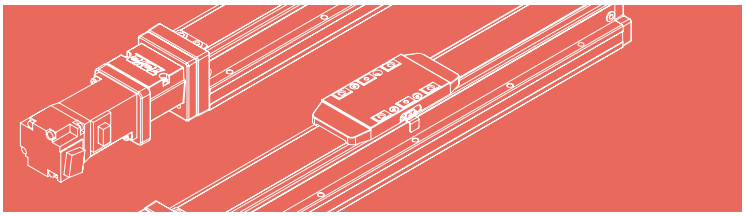

Specification

Item	Ball Screw Spec.	Ballscrew Accuracy Grade Code		L		C
		Ballscrew Accuracy Grade		C7 Rolled Ballscrews		C5 Ground Ballscrews
		Repeatability	mm	±0.005		±0.003
		Stroke Pitch	mm	50-1250mm (50 increments)		50-700mm (50 increments)

Item	Ball screw	Outer dia. & Precision grade	mm	Ø16 & C7		
		Lead	mm	5	10	20
		Maximum Rotating speed	rpm	3600	3600	3600
		Maximum linear speed ※1	mm/s	300	600	1200
		Basic dynamic load rating Ca	N	8042	6300	4152
		Basic static load rating Coa	N	15088	11596	7439
		Load factor		1.2	1.35	1.35
	Linear Guide	Dynamic horizontal 100 Km of travel	kgf	1899		
		Dynamic horizontal 1000 Km of travel	kgf	881		
		Dynamic horizontal 10000 Km of travel	kgf	409		
		Static horizontal	kg	3490		
	Fixed bearing	Basic dynamic load rating Cr	N	2600		
		Static load rating Cor	N	4750		
	Common Spec	Start torpue	N.cm	10		
		Allowable input torque	N.m	2.2		
		Maximum acceleration	m/s^2	10		
		Friction coefficient		0.03		
		Ambient temperature ※2	°C	0~+40		

※1 Estimated max speed and max payload when using a standard 100W servo motor.
(Confirm max speed and payload at the same time.)

※2 Customized temperature:-20°C~ 80°C. special grease requirement need to follow customization process.

Static Loading Moment

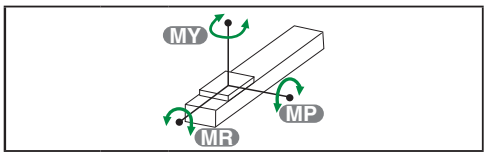

MY	N.m	318
MP	N.m	318
MR	N.m	626

Dynamic Loading Moment

Travel	km	100	1000	10000
MY	N.m	121.6	56.5	26.2
MP	N.m	121.6	56.5	26.2
MR	N.m	201.9	93.7	43.5

Parts list

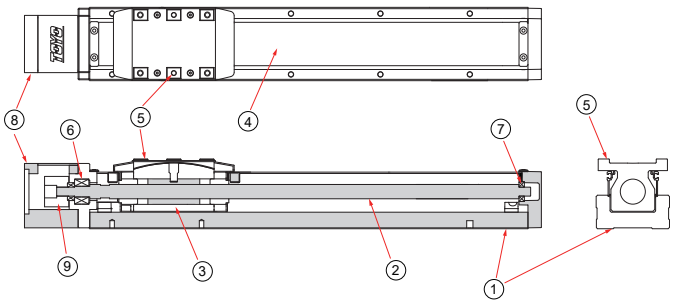

No.	Part Description	Material
1	Housing	AL6463
2	Ball Screw	S45C
3	Ball Screw Nut	S45C
4	Steel Band	SUS430
5	Carriage	SNCM21H
6	Ball Bearing Dual Arrangement	SUJ2
7	Ball Bearing	SUJ2
8	Fixed Support Block-Inline Motor Mounting Bracket	AL6061
9	Coupling- Clamping	AL6061

GTH8K

▶ Integrated Linear Bearing ▶ Ball Screw Drive

BC Motor Exposed

2D CAD 3D CAD Download CAD data at www.toyorobot.com

Unit : mm

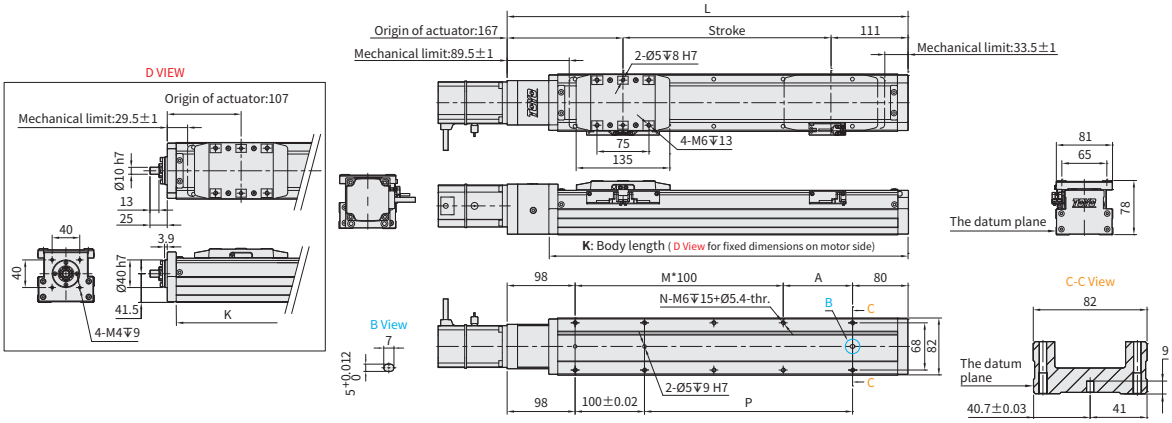

Stroke		50※2	100	150	200	250	300	350	400	450	500	550	600	650	700	750	800	850	900	950	1000	1050	1100
Limit Stroke (±1)		70	120	170	220	270	320	370	420	470	520	570	620	670	720	770	820	870	920	970	1020	1070	1120
L		328	378	428	478	528	578	628	678	728	778	828	878	928	978	1028	1078	1128	1178	1228	1278	1328	1378
A		50	100	50	100	50	100	50	100	50	100	50	100	50	100	50	100	50	100	50	100	50	100
M		1	1	2	2	3	3	4	4	5	5	6	6	7	7	8	8	9	9	10	10	11	11
N		6	6	8	8	10	10	12	12	14	14	16	16	18	18	20	20	22	22	24	24	26	26
P		50	100	150	200	250	300	350	400	450	500	550	600	650	700	750	800	850	900	950	1000	1050	1100
KG※1		6. 62	7. 31	7. 99	8. 68	9. 37	10. 05	10. 74	11. 42	12. 11	12. 79	13. 48	14. 16	14. 85	15. 54	16. 22	16. 91	17. 59	18. 28	18. 96	19. 65	20. 33	21. 02
K		268	318	368	418	468	518	568	618	668	718	768	818	868	918	968	1018	1068	1118	1168	1218	1268	1318
Linear Speed mm/s	Lead 5	300												292	250	225	200	175	150	142	133	117	108
	Lead 10	600												583	500	450	400	350	300	283	267	233	217
	Lead 20	1200												1167	1000	900	800	700	600	567	533	467	433

※1 KG refers to the weight with motor related accessories (excluding motor), not corresponding to K Type.
※2 When the stroke is 50mm, if fixing the body from the top to the bottom, the fixing hole will be blocked by slider and only can be uses 4 screws to fix;as a result, suggest that fixing actuator body from the bottom to the top.

BM Motor Bottom Side

2D CAD 3D CAD Download CAD data at www.toyorobot.com

Unit : mm

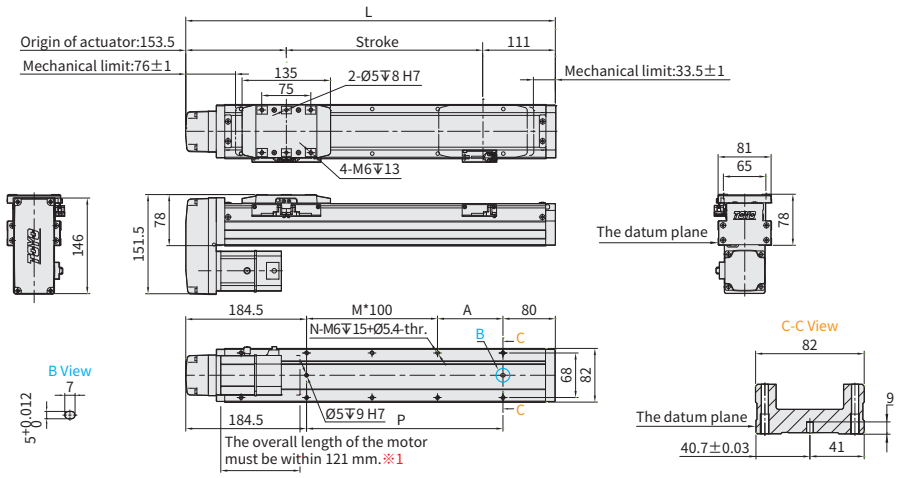

Stroke		50※2	100	150	200	250	300	350	400	450	500	550	600	650	700	750	800	850	900	950	1000	1050	1100
Limit Stroke (±1)		70	120	170	220	270	320	370	420	470	520	570	620	670	720	770	820	870	920	970	1020	1070	1120
L		314. 5	364. 5	414. 5	464. 5	514. 5	564. 5	614. 5	664. 5	714. 5	764. 5	814. 5	864. 5	914. 5	964. 5	1014. 5	1064. 5	1114. 5	1164. 5	1214. 5	1264. 5	1314. 5	1364. 5
A		50	100	50	100	50	100	50	100	50	100	50	100	50	100	50	100	50	100	50	100	50	100
M		0	0	1	1	2	2	3	3	4	4	5	5	6	6	7	7	8	8	9	9	10	10
N		4	4	6	6	8	8	10	10	12	12	14	14	16	16	18	18	20	20	22	22	24	24
P		50	100	150	200	250	300	350	400	450	500	550	600	650	700	750	800	850	900	950	1000	1050	1100
KG※1		6. 66	7. 35	8. 03	8. 72	9. 41	10. 09	10. 78	11. 46	12. 15	12. 83	13. 52	14. 20	14. 89	15. 58	16. 26	16. 95	17. 63	18. 32	19. 00	19. 69	20. 37	21. 06
Linear Speed mm/s	Lead 5	300												292	250	225	200	175	150	142	133	117	108
	Lead 10	600												583	500	450	400	350	300	283	267	233	217
	Lead 20	1200												1167	1000	900	800	700	600	567	533	467	433

※1 When motor with brake assembled on lower side, or the total length over than spec limit, it may not use standard pinhole. Please contact our sales department if you need more information & requirement.
※2 When the stroke is 50mm, if fixing the body from the top to the bottom, the fixing hole will be blocked by slider and only can be uses 4 screws to fix;as a result, suggest that fixing actuator body from the bottom to the top.

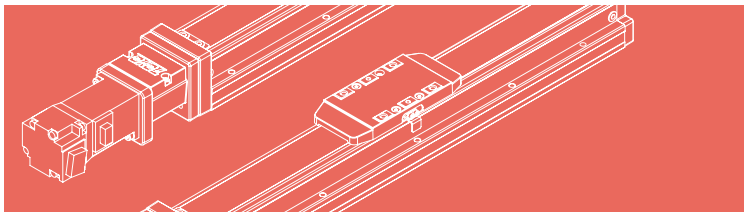

BR Motor Left Side

2D CAD 3D CAD Download CAD data at www.toyorobot.com

Unit : mm

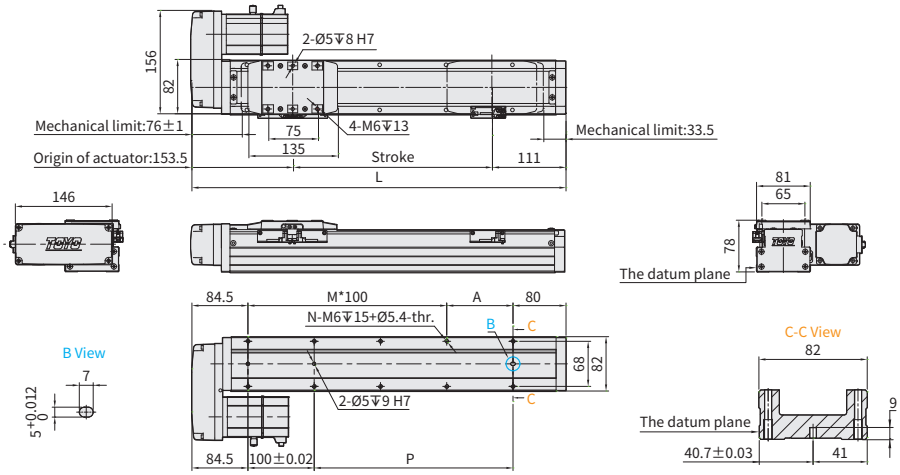

Stroke		50※2	100	150	200	250	300	350	400	450	500	550	600	650	700	750	800	850	900	950	1000	1050	1100
Limit Stroke (±1)		70	120	170	220	270	320	370	420	470	520	570	620	670	720	770	820	870	920	970	1020	1070	1120
L		314.5	364.5	414.5	464.5	514.5	564.5	614.5	664.5	714.5	764.5	814.5	864.5	914.5	964.5	1014.5	1064.5	1114.5	1164.5	1214.5	1264.5	1314.5	1364.5
A		50	100	50	100	50	100	50	100	50	100	50	100	50	100	50	100	50	100	50	100	50	100
M		1	1	2	2	3	3	4	4	5	5	6	6	7	7	8	8	9	9	10	10	11	11
N		6	6	8	8	10	10	12	12	14	14	16	16	18	18	20	20	22	22	24	24	26	26
P		50	100	150	200	250	300	350	400	450	500	550	600	650	700	750	800	850	900	950	1000	1050	1100
KG※1		6.66	7.35	8.03	8.72	9.41	10.09	10.78	11.46	12.15	12.83	13.52	14.20	14.89	15.58	16.26	16.95	17.63	18.32	19.00	19.69	20.37	21.06
Linear Speed mm/s	Lead 5	300												292	250	225	200	175	150	142	133	117	108
	Lead 10	600												583	500	450	400	350	300	283	267	233	217
	Lead 20	1200												1167	1000	900	800	700	600	567	533	467	433

※2 When the stroke is 50mm, if fixing the body from the top to the bottom, the fixing hole will be blocked by slider and only can be uses 4 screws to fix;as a result, suggest that fixing actuator body from the bottom to the top.

BL Motor Right Side

2D CAD 3D CAD Download CAD data at www.toyorobot.com

Unit : mm

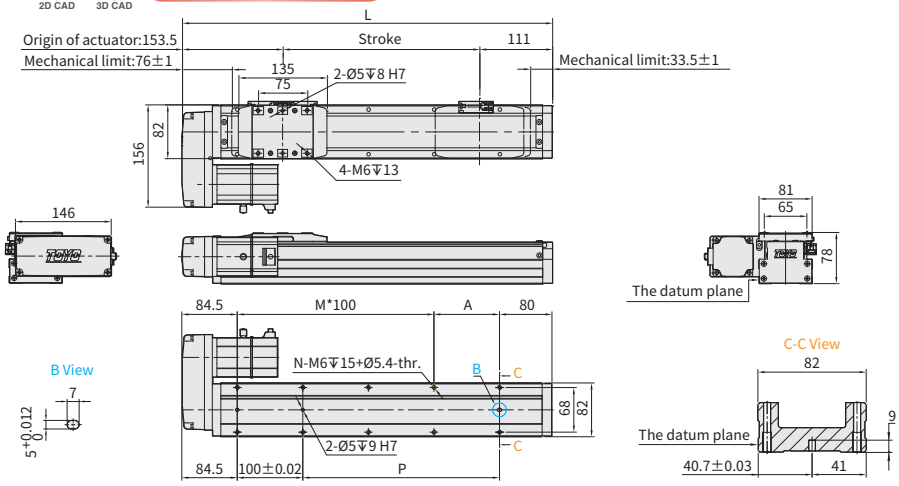

Stroke		50 *2	100	150	200	250	300	350	400	450	500	550	600	650	700	750	800	850	900	950	1000	1050	1100
Limit Stroke (±1)		70	120	170	220	270	320	370	420	470	520	570	620	670	720	770	820	870	920	970	1020	1070	1120
L		314.5	364.5	414.5	464.5	514.5	564.5	614.5	664.5	714.5	764.5	814.5	864.5	914.5	964.5	1014.5	1064.5	1114.5	1164.5	1214.5	1264.5	1314.5	1364.5
A		50	100	50	100	50	100	50	100	50	100	50	100	50	100	50	100	50	100	50	100	50	100
M		1	1	2	2	3	3	4	4	5	5	6	6	7	7	8	8	9	9	10	10	11	11
N		6	6	8	8	10	10	12	12	14	14	16	16	18	18	20	20	22	22	24	24	26	26
P		50	100	150	200	250	300	350	400	450	500	550	600	650	700	750	800	850	900	950	1000	1050	1100
KG※1		6.66	7.35	8.03	8.72	9.41	10.09	10.78	11.46	12.15	12.83	13.52	14.20	14.89	15.58	16.26	16.95	17.63	18.32	19.00	19.69	20.37	21.06
Linear Speed mm/s	Lead 5	300												292	250	225	200	175	150	142	133	117	108
	Lead 10	600												583	500	450	400	350	300	283	267	233	217
	Lead 20	1200												1167	1000	900	800	700	600	567	533	467	433

※2 When the stroke is 50mm, if fixing the body from the top to the bottom, the fixing hole will be blocked by slider and only can be uses 4 screws to fix;as a result, suggest that fixing actuator body from the bottom to the top.